A
0
0
0
6
2
2
5
9
6
5

AIR BRAKE.

SUPPLEMENT TO

"THE SCIENCE OF RAILWAYS"

BY

MARSHALL MONROE KIRKMAN.

PUBLISHED BY THE

WORLD RAILWAY PUBLISHING COMPANY,

ILLUSTRATING
AND EXPLAINING THE WORKINGS OF THE
AIR BRAKE.

PRICE $2.50.

NEW YORK AND CHICAGO:
THE WORLD RAILWAY PUBLISHING COMPANY,
1902

COPYRIGHT BY
THE WORLD RAILWAY PUBLISHING COMPANY.
1900, 1902,
All rights reserved.
ALSO ENTERED AT STATIONER'S HALL, LONDON, ENGLAND,

THE HENNEBERRY CO., PRINTERS, CHICAGO.

THE AIR BRAKE.

THE AIR BRAKE AND ITS WORKINGS.

The vast and unexampled use of the Air Brake makes a clear knowledge of it of vital importance to every one actively interested in the movement of trains. In order to bring this about more fully, I have prepared, as a supplement to "THE SCIENCE OF RAILWAYS" the accompanying plates and descriptive matter, illustrating and explaining the WESTINGHOUSE QUICK ACTION AUTOMATIC BRAKE APPARATUS.

It embraces the latest improved appliances and such as the Westinghouse Company includes under that head.

The diagrams, therefore, will be found especially interesting and valuable to all who have occasion to use or make a study of such matters.

Nothing could be more clear than the cuts and the explanations that accompany them, as they have in the main been prepared under the immediate eye of the Westinghouse Company.

The rapid increase in the use of the "High-Speed Brake" in fast express service, and the favorable results obtained in handling heavy trains on mountain grades by the employment of the High-Pressure Control Apparatus (Plate G 49) lend especial interest to the accompanying illustrations of these devices, to which the attention

of the student in such matters is especially directed.

Attention is also directed to Plate G 1 which illustrates the entire brake, and to the colored Plates, G 2, G 3 and G 35, which show the application of the various parts of the apparatus to the engine, tender and cars. The cuts that follow show, in detail, the various parts which go to make up the complete machine.

In addition to the air brake the TRAIN AIR SIGNAL APPARATUS is also portrayed herein. See Plate F 33.

A carefully prepared index will be found on pages 5 and 6.

In Volume 1, Chapter 6, of the "Science of Railways," the evolution of the brake is illustrated, followed by a carefully prepared account, with attendant cuts of the air brake and its construction and management. It is again referred to with considerable particularity in Volumes 4 and 12 of the same work. This supplement, I beg to state, is not intended to supersede what is said in the "Science of Railways" in regard to the air brake, but to be auxiliary thereto, for the better elucidation of this very complex and important feature in the operation of trains and in the mechanical department of railroads.

M. M. KIRKMAN.

RULES REGARDING THE OPERATION OF THE AIR BRAKE.

Information and rules on the following points will be found in the "Science of Railways," in the volumes and at the pages indicated:

	VOLUME	PAGE
The First Form of Air Brake	I	305
How to Use the Air Brake	I	314
General Instructions to Enginemen	I	315
Making up Trains and Testing Brakes	I	317
Application of Air Brake in Service	I	317
Application of Air Brake in Emergency	I	319
When Brakes are Applied from an Unknown Cause	I	319
Braking by Hand	I	319
Cutting out Brakes	I	320
Double Headers	I	320
Extra Hose	I	321
Sliding Wheels	I	321
Additional Instructions to Engineers	I	363
Test of Brakes	I	363
Defective Car	I	365
Running Position	I	365
Clean Valves	I	365
Pump Stopped	I	366
Air Signal	I	366
Handling Trains	I	366
To Release a Part Air Train While Moving	I	367
Train Parted, etc	I	368
Avoiding Over Reductions	I	368
Passenger Trains	I	368
To Avoid Sliding of Wheels	I	369
General Instructions to Trainmen	I	321
Making up Trains and Testing Brakes	I	321
Use of Hand Brakes	I	323
Detaching Engine or Cars	I	323
Frozen Couplings	I	323
Brakes Sticking	I	324
Train Breaking into Two or More Parts	I	324
Cutting out the Brake on a Car	I	324
Conductor's Valve	I	326
Burst Hose	I	326
Call for Brakes	I	326
Brakes Not in Use	I	326
Pressure Retaining Valve	I	327
Reporting Defects to Inspectors	I	327
Extra Hose	I	328
Additional Instructions to Trainmen	I	369
Blow out Hose	I	369
Coupling and Uncoupling	I	370
Discovering Leaks	I	370
Emergency when Service is Intended	I	371
Charging	I	371
Air Cocks	I	372
Cars Cut Out	I	372
Disabled Cars	I	373

	VOLUME	PAGE
Hand Brakes on Air Braked Cars	I	374
Releasing Brakes	I	374
Triple Valve Blowing	I	374
Retainer Stopped Up	I	375
Leaving Train at Terminals	I	375
Test Brakes After Change	I	375
Operating Train Air Signal	I	376
General Instructions to Engine House Foremen and Inspectors	I	328
Air Pump	I	328
Pump Governor	I	328
Engineer's Brake Valve	I	328
Adjustment of Brakes	I	329
Brake Cylinders and Triple Valves	I	329
Draining	I	329
General Instructions to Car Inspectors	I	330
Making up Trains and Testing Brakes	I	330
Cleaning Cylinders and Triple Valves	I	331
Adjustment of Brakes	I	332
Braking Power	I	332
Repair Parts	I	332
Hanging up Hose	I	333
Responsibility of Inspectors	I	333
Full Description of the Air Brake and its Parts Fully Illustrated	I	333
Instructions to Switchmen and Yardmen	I	376
Cause of Leaks	I	376
"Bleeding of Train"	I	376
Car Design	I	377
Brake Cylinders	I	377
Stiff Brake Rigging	I	378
Hand Brake	I	378
Braking Power	I	378
Brake Hangers	I	379
Style of Brake	I	379
Piping	I	379
Locomotive Design	I	380
The Main Reservoir	I	380
The Steam Brake	I	380
Brake Cylinders	I	380
Braking Power	I	380
Piping	I	380
Metallic Gaskets	I	381
Location of Air Pumps	I	381
Pump Packing	I	381
Tender Brake	I	381
Repairs on Locomotives	I	382
Air Signal	I	382
Repairs on Cars	I	382
Yard Testing Plants	I	382
Triple Valves	I	382
The Sweeney Brake	I	383
Air Brake Examination, Questions and Answers	XII	100

INDEX.

PAGE

Air Pump 8
Air Gauge, Duplex and Semaphore 14
Air Strainers 14, 40, 44, 58
Angle Fittings 14, 44
Angle Cocks 40, 58
Automatic Brake Equipment, Diagramatic Illustration ..... Opposite 6
Brake-Pipe Air Strainer 40, 58
Car Discharge Valve ..... Opposite 42
Car Cylinders, Passenger 34, 38, 39
Car Cylinders and Reservoirs, Freight ..... 50 to 56
Cleaning Tool, for Coupling Groove 58
Conductor's Valve 40
Cross Heads 23
Cut-Out Cocks 40, 44, 58, 66
Cylinder Head Types 17
Drain Cock 14, 24
Driver Brake Cylinders 18, 19, 20, 21
Dummy Couplings 40, 44, 58
Duplex Pump Governor 64
Engineer's Brake Valve 10
Engine and Tender Brake Apparatus, Detail Parts 14
Feed Valve 10
Feed Valve Pipe Bracket 66
Flexible Hose Connection for Truck-Brake Cylinder 66
Freight Car Brake Equipment ..... Opposite 46
Freight Car Brakes, Cylinders and Reservoirs ..... 50 to 56
Freight Car Brake Apparatus, Details 58
High-Speed Brake ..... Opposite 70
High-Speed Automatic Reducing Valve 60
High Pressure Control ..... Opposite 68
High-Speed Plain Triple Valve 62
High-Speed and High-Pressure Control, Detail Parts 66
Hose and Fittings 40, 44, 58, 66
Locomotive and Tender Equipment ..... Opposite 6
Passenger-Car Brake and Train Air Signal Apparatus ..... Opposite 6
Passenger-Car Fixtures, Details 40
Passenger-Car Brake Cylinders 34, 38, 39
Plain Triple Valves 26, 28, 62
Pressure Retaining Valve 58
Pump Governor 12, 64
Quick-Action Freight Triple Valve 48
Quick-Action Passenger Triple Valve 22, 36
Reducing Valve ..... Opposite 42
Release Valve 58
Retaining Valve 58
Reversing Cock 66
Reservoirs 24
Reservoir Unions 14
Reservoir Drain Cock 14, 24
Safety Valve 66
Signal Valve ..... Opposite 42
Signal Whistle ..... Opposite 42
Signal Pipe Air Strainer 44
Slide-Valve, Feed Valve 10
Steam Valve 14
Tender Drain Cup 14
Tender-Brake Cylinder 30
Train Air Signal Equipment ..... Opposite 42
Train Air Signal, Detail Parts 44
Triple Valve, Plain 26, 28
Triple Valve, Quick-Action Passenger 32, 36
Triple Valve, Quick-Action Freight 48
Triple Valve, High-Speed 62
Truck-Brake Cylinder 22

PLATE G 1.

Diagramatic Illustration of the Westinghouse Quick-Action Automatic Brake.—*Opposite.*

PLATE G 2.

Westinghouse-American Locomotive and Tender Equipment.—*Opposite.*

PLATE G 3.

Westinghouse Standard Passenger Car Brake and Signal Equipment.—*Opposite.*

SEMAPHORE
GAUGE

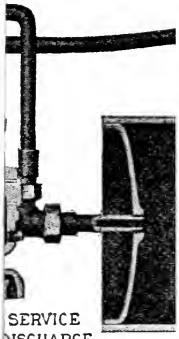

SERVICE
DISCHARGE

EQUAL

CUT OUT COCK

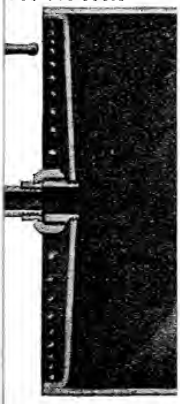

DR

PLATE 61. DIAGRAMATIC ILLUSTRATION OF THE WESTINGHOUSE QUICK-ACTION AUTOMATIC BRAKE.

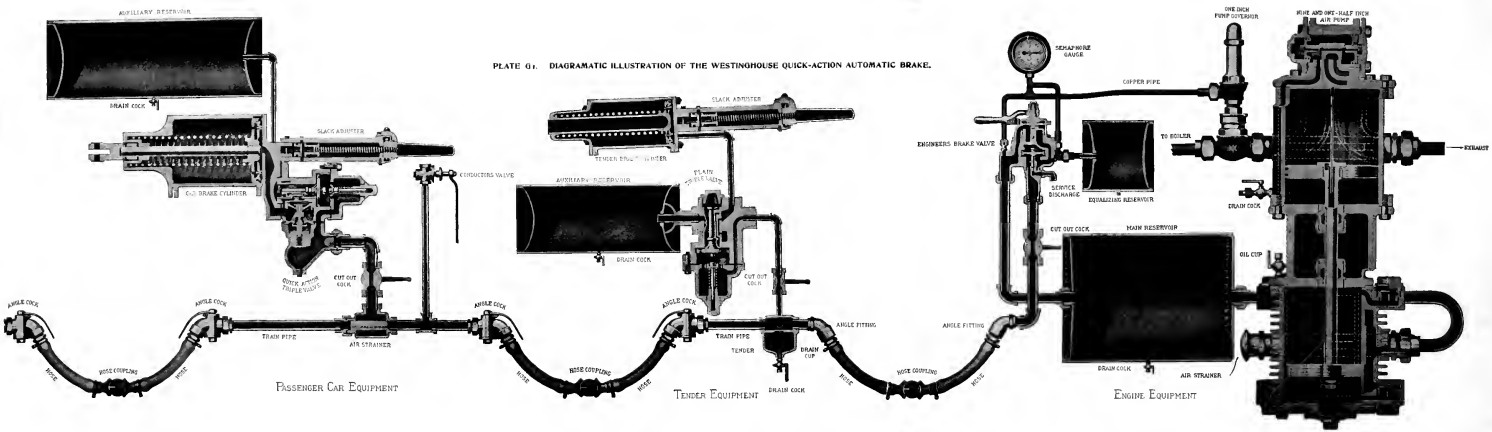

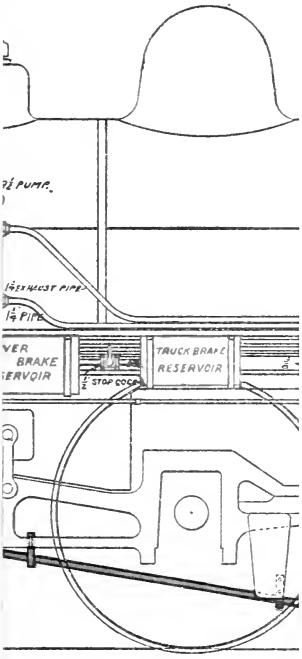

IM

INS, AND LEVERS ILLUSTRATED ARE M. C.
WHERE PRACTICABLE TO EMPLOY BENDS IN
HEAVY CLAMPS. USE NO LEAD INSIDE OF
DS. COPPER PIPES ARE RECOMMENDED FO

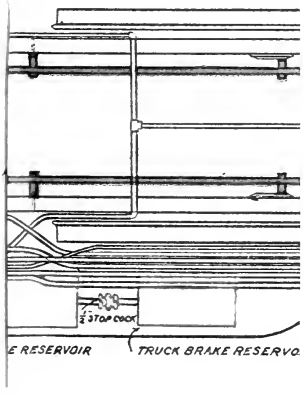

PLATE G2.

WESTINGHOUSE-AMERICAN LOCOMOTIVE AND TENDER EQUIPMENT.

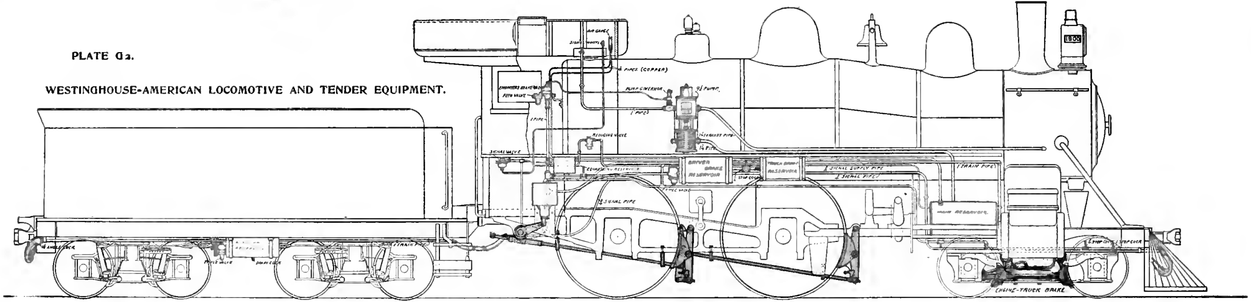

EXPLANATION OF TINTS

Westinghouse Automatic Brake and Train Air-Signal Apparatus shown in Orange Tint.
American Driver Brake, Engine Truck Brake and Automatic Slack Adjuster shown in Blue Tint.

IMPORTANT SUGGESTIONS.

All brake rods, pins, and levers illustrated are M. C. B standard sizes, and no deviation therefrom should be permitted. In piping, ells should not be used where practicable to employ bends instead. Remove fins carefully, blow out pipes with steam, and attach firmly to car timbers by means of heavy clamps. Use no lead inside of sockets, if needed, apply sparingly on outside, and test all connections under pressure with soapsuds. Copper pipes are recommended for Air-Gauge and Pump-Governor connections.

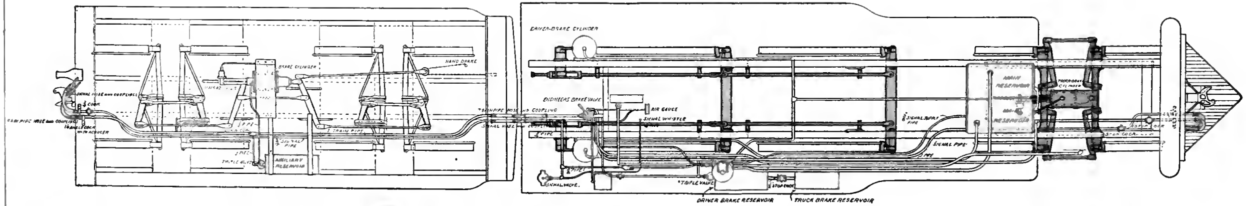

BRAKE AND SIGNAL

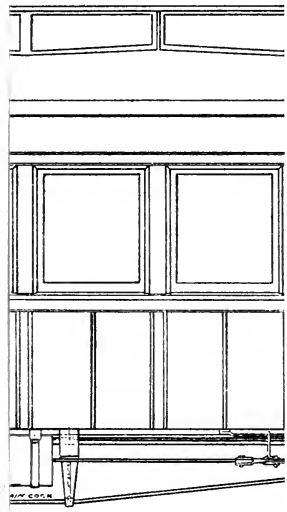

RAKE RODS, PINS, AND LEVERS ILLUSTRATE
OT BE USED WHERE PRACTICABLE TO EMP
Y MEANS OF HEAVY CLAMPS. USE NO LE
WITH SOAPSUDS

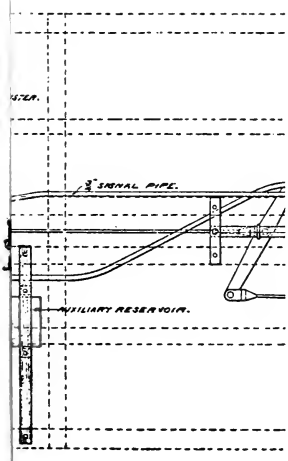

PLATE 03. WESTINGHOUSE STANDARD PASSENGER CAR BRAKE AND SIGNAL EQUIPMENT.

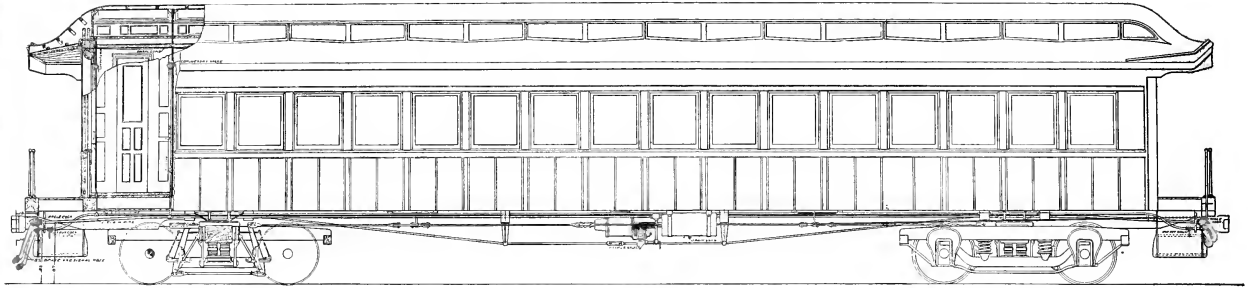

EXPLANATION OF TINTS

STANDARD QUICK ACTION AUTOMATIC BRAKE AND TRAIN AIR SIGNAL APPARATUS FURNISHED WITH COMPLETE PASSENGER CAR EQUIPMENTS—SCHEDULES C & R P AND K—SHOWN IN ORANGE TINT
AMERICAN BRAKE COMPANY'S AUTOMATIC SLACK ADJUSTER SHOWN IN BLUE TINT

IMPORTANT SUGGESTIONS

ALL BRAKE RODS, PINS AND LEVERS ILLUSTRATED ARE M C B STANDARD SIZES AND NO DEVIATION THEREFROM SHOULD BE PERMITTED. IN PIPING ELS SHOULD NOT BE USED WHERE PRACTICABLE TO EMPLOY BENDS INSTEAD. REMOVE PINS CAREFULLY, BLOW OUT PIPES WITH STEAM, AND ATTACH FIRMLY TO CAR TIMBERS BY MEANS OF HEAVY CLAMPS. USE NO LEAD INSIDE OF SOCKETS. IF HOSES APPLY SPARINGLY ON OUTSIDE AND TEST ALL CONNECTIONS UNDER PRESSURE WITH SOAPSUDS.

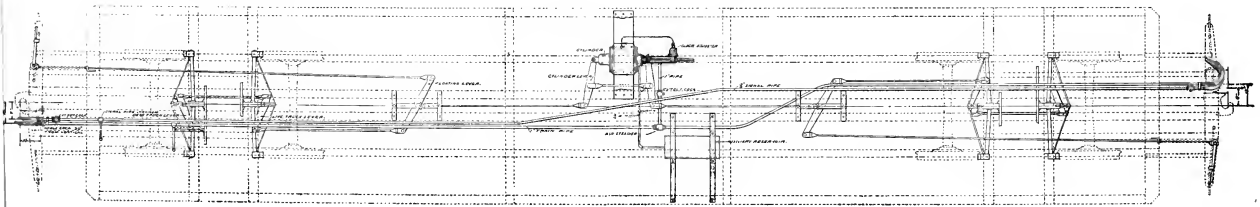

PLATE F4. NINE AND ONE-HALF INCH AIR PUMP.

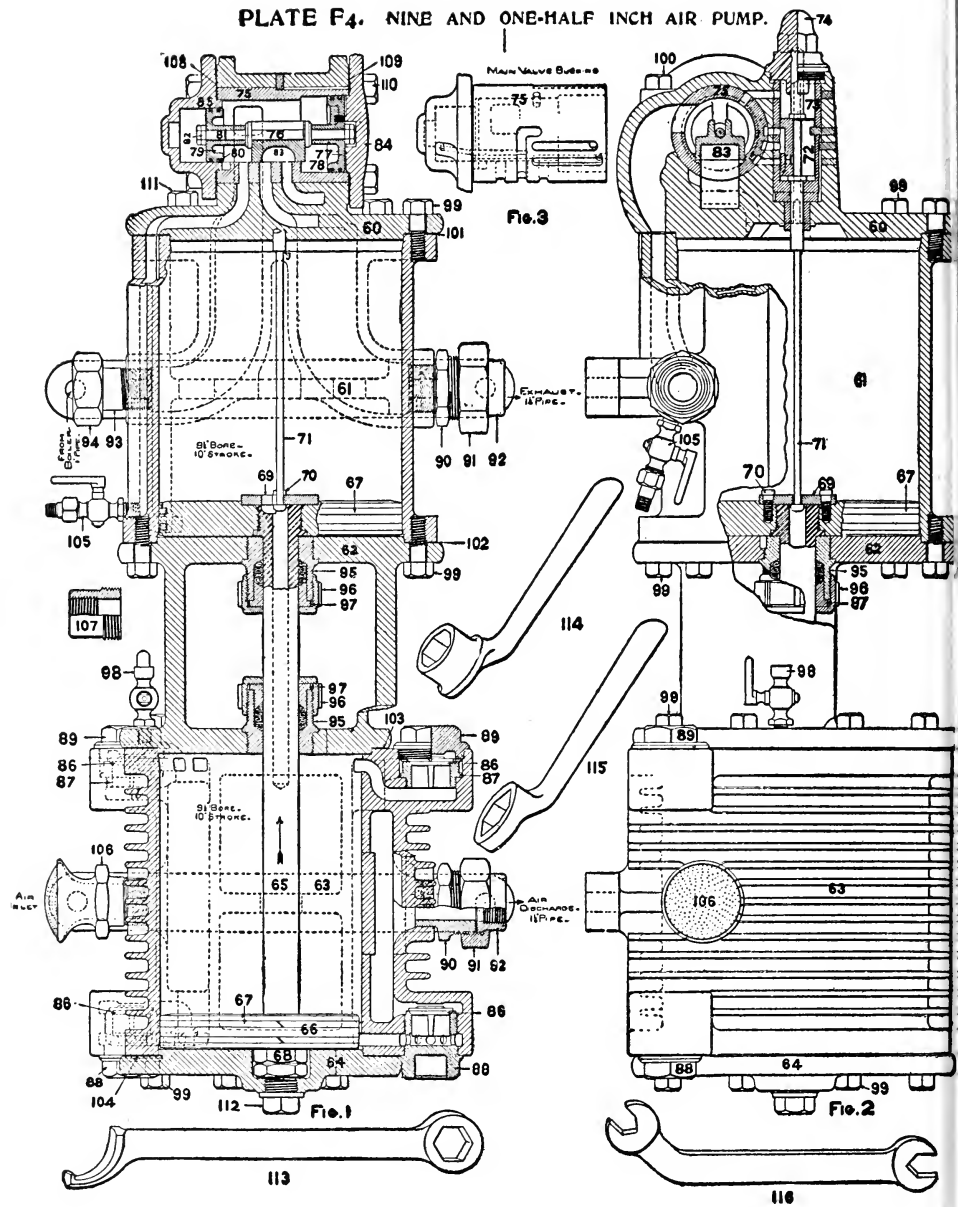

PLATE F 4.

NINE AND ONE-HALF INCH AIR PUMP.

No. 1. Nine and One-half inch Air Pump, complete.—

No.
60. Top Head, complete (includes one each of Nos. 72, 73, 74, 75, 76, 83, 84, 85, 108, and 109, and 8 of No. 110)
61. Steam Cylinder, complete (includes one each of Nos. 90, 91, 92, 93 and 94, and 2 of No. 105).
62. Center Piece, complete (includes 2 each of Nos. 95, 96, and 97, and one of No. 98).
63. Air Cylinder, complete (includes 4 of No. 86, 2 each of Nos. 87, 88, and 89, and one each of Nos. 90, 91, 92, and 106).
64. Lower Head.
65. Steam Piston and Rod (includes 2 each of Nos. 67, 68, and 70, and one of No. 69).
66. Air Piston, complete (includes 2 of No. 67).
67. Piston Packing Ring
68. Piston-Rod Nut.
69. Reversing-Valve Plate
70. Reversing-Valve-Plate Bolt
71. Reversing-Valve Rod.
72. Reversing Valve.
73. Reversing-Valve-Chamber Bush.
74. Reversing-Valve-Chamber Cap.
75. Main-Valve Bush.
76. Main Valve, complete (includes Nos. 77, 79, and 81, and 4 of No 82).
77. Large Main-Valve Piston (includes 2 of No. 78).
78. Large Main-Valve-Piston Packing Ring
79. Small Main-Valve Piston (includes 2 of No. 80).
80. Small Main-Valve-Piston Packing Ring.
81. Main-Valve Stem.

No.
82. Main-Valve-Stem Nut.
83. Main Slide Valve.
84. Right Main-Valve Cylinder Head.
85. Left Main-Valve Cylinder Head.
86. Air Valve.
87. Air-Valve Seat.
88. Air-Valve Cage.
89. Valve-Chamber Cap.
90. One and One-fourth inch Union Stud.
91. One and One-fourth inch Union Nut.
92. One and One-fourth inch Union Swivel.
93. One-inch Steam-Pipe Stud.
94. Governor Union Nut.
95. Stuffing Box.
96. Stuffing-Box Nut.
97. Stuffing-Box Gland.
98. Air-Cylinder Oil Cup.
99. Short Cap Screw (⅝"x1⅝")
100. Long Cap Screw (⅝"x6¼")
101. Upper Steam-Cylinder Gasket
102. Lower Steam-Cylinder Gasket
103. Upper Air-Cylinder Gasket
104. Lower Air-Cylinder Gasket.
105. Drain Cock.
106. Air Strainer.
107. One-inch Steam-Pipe Sleeve
108. Left Main-Valve-Head Gasket
109. Right Main-Valve-Head Gasket
110. Main-Valve-Head Bolt (⅝"x1¼")
111. Cap Screw (⅝"x2").
112. Cylinder-Head Plug.
113. Packing and Cap-Nut Wrench
114. Air-Valve-Seat Wrench.
115. Air-Valve-Cage Wrench
116. Cap-Screw Wrench.

The accompanying cut illustrates the Standard 9 1/2-inch Air Pump, which is usually located on the right side of the locomotive. A special "Left-hand 9 1/2-inch Air Pump" is also manufactured As its name indicates, it is designed for installation on the left side of the locomotive; but all its parts are interchangeable with those of the Standard Pump, and its steam and exhaust-pipe connections have been so arranged that it can be substituted for the same and used on the right side if desired.

PLATE G 6.

ENGINEER'S BRAKE VALVE.

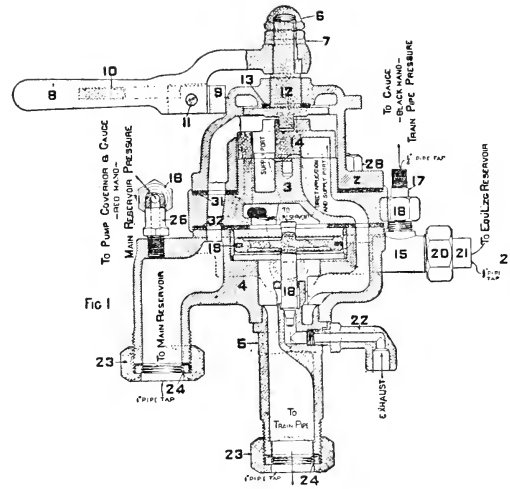

Fig 1

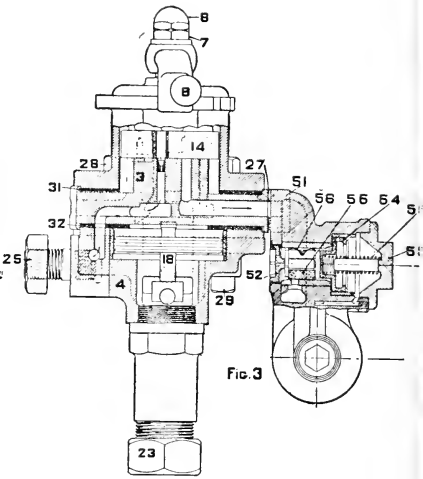

Fig. 3

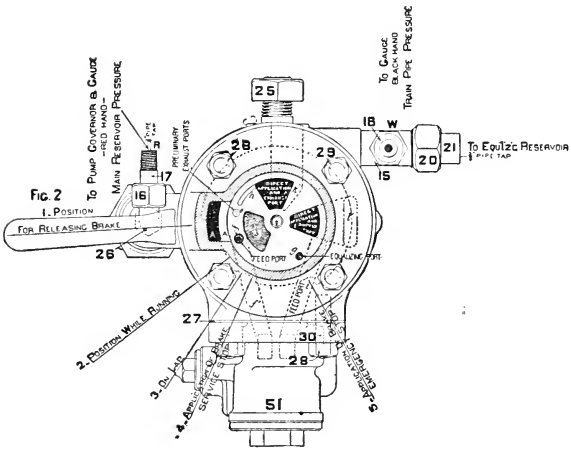

Fig. 2

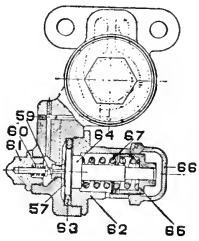

Fig. 4.

PLATE G 6.

ENGINEER'S BRAKE VALVE.

No. 100. Brake Valve with Slide-Valve Feed Valve, One-Inch Cut-out Cock (Fig 6, Plate G 32), and Equalizing Reservoir (Fig. 4, Plate G 23) Complete.

No. 1. Brake Valve proper (without Feed-Valve Attachment); covers Nos. 2 to 32, inclusive.

No.
2. Valve Body.
3. Rotary-Valve Seat.
4. Bottom Case.
5. Bottom Cap.
6. Jam Nut.
7. Top Nut.
8. Handle (includes Nos. 9, 10, and 11).
9. Handle Bolt.
10. Handle-Bolt Spring.
11. Handle-Bolt Screw.
12. Rotary-Valve Key.
13. Washer.
14. Rotary Valve.
15. Gauge-Pipe Tee.
16. One-fourth inch Union Nut.
17. One-fourth inch Union Swivel.

No.
18. Piston Valve (includes No. 19).
19. Piston Ring.
20. Three-eighths inch Union Nut.
21. Three-eighths inch Union Swivel.
22. Exhaust-Pipe Fitting.
23. One-inch Union Nut.
24. One-inch Union Swivel.
25. Holding Nut.
26. Gauge-Pipe Fitting.
27. Feed-Valve-Case Gasket.
28. Half-inch Nut.
29. Half-inch Bolt.
30. Feed-Valve Stud.
31. Upper Gasket.
32. Lower Gasket.

No. 50. Slide-Valve Feed Valve, complete; covers Nos. 51 to 67, inclusive.

51. Feed-Valve Body (bushed).
52. Flush Nut.
53. Cap Nut.
54. Supply-Valve Piston.
55. Supply Valve.
56. Supply-Valve Spring.
57. Diaphragm (2 pieces).
58. Supply-Valve-Piston Spring.
59. Regulating Valve.
60. Regulating-Valve Spring.
61. Regulating-Valve Cap Nut.
62. Spring Box.
63. Diaphragm Ring.
64. Diaphragm Spindle.
65. Regulating Nut.
66. Check Nut.
67. Regulating Spring.

PLATE F7.

ONE-INCH PUMP GOVERNOR.

STANDARD FOR NINE AND ONE-HALF INCH PUMP.

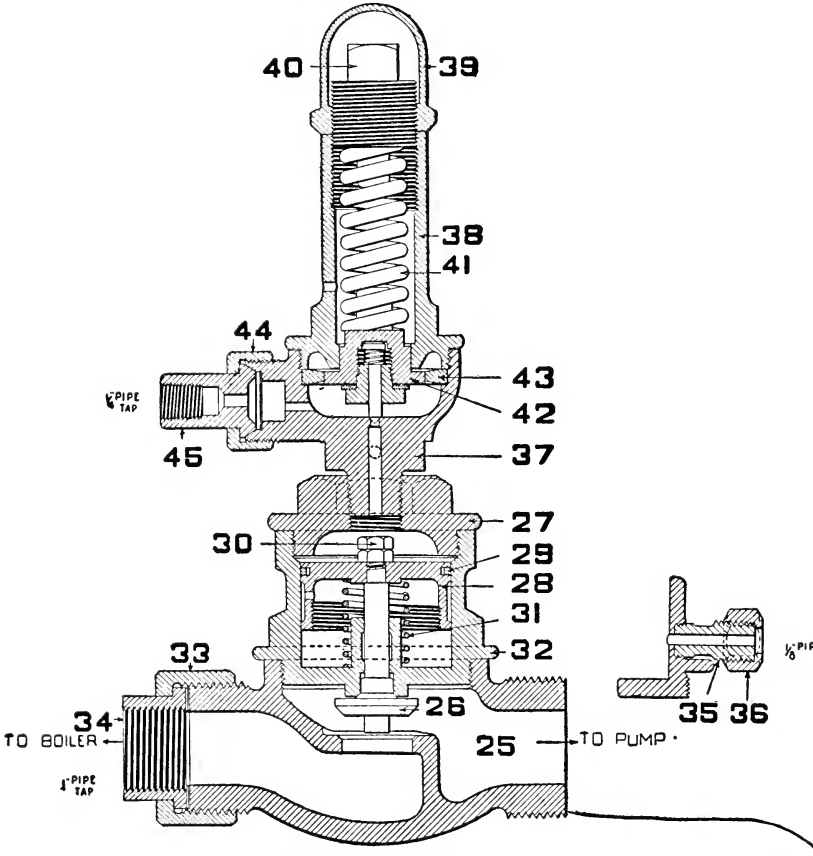

NOTE.—When used in conjunction with an Engineer's Brake Valve having a Feed Valve as in most instances, the Pump Governor should be piped to the Main Reservoir Connection at the Brake Valve, as indicated on Plates "F 6" and "G 6", when an Excess-Pressure Valve is used in place of a Feed Valve, however, the Governor is actuated by Train Line Pressure, and should be piped to Train Line accordingly.

PLATE F7.

ONE-INCH PUMP GOVERNOR.

No. 1. One-inch Pump Governor, complete.

No.		No.	
25.	Steam-Valve Body	35.	Waste-Pipe Stud.
26.	Steam Valve.	36.	Waste-Pipe Union Nut.
27.	Cylinder Cap.	37.	Diaphragm Body.
28.	Governor Piston (includes No. 29).	38.	Spring Box.
29.	Piston Packing Ring.	39.	Cap Nut.
30.	Governor-Piston Nut.	40.	Regulating Nut.
31.	Governor-Piston Spring.	41.	Regulating Spring.
32.	Steam-Valve Cylinder (includes No. 35 and 36).	42.	Diaphragm, complete.
33.	One-inch Union Nut.	43.	Diaphragm Ring.
34.	One-inch Union Swivel.	44.	Union Nut.
		45.	Union Swivel.

PLATE 69. DETAIL PARTS OF ENGINE AND TENDER BRAKE APPARATUS.

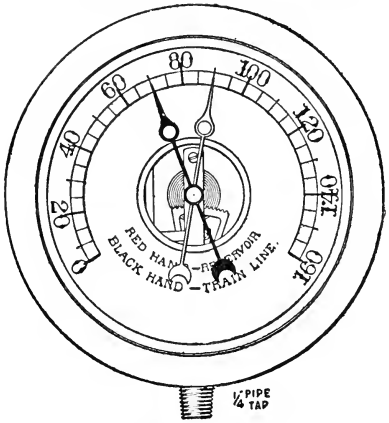

Fig. 1.

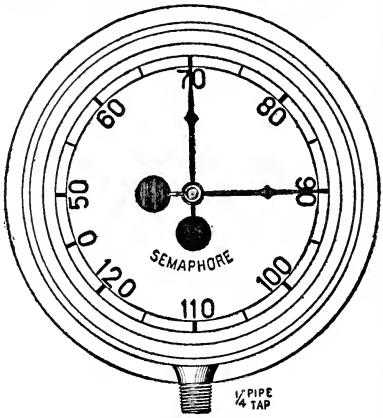

Fig. 2.

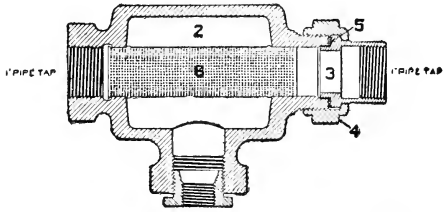

Fig. 3.

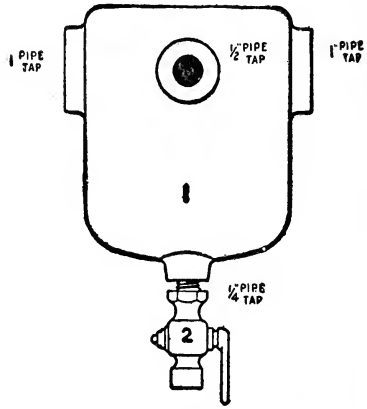

Fig. 6.

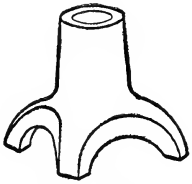

Fig. 5.

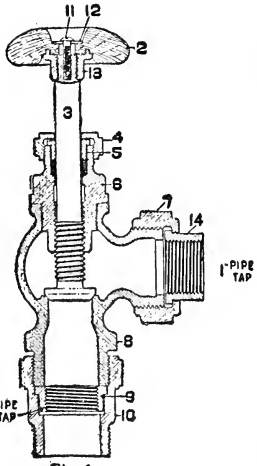

Fig 4.

Fig. 7.

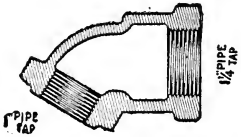

Fig. 8.

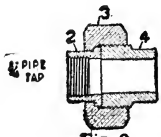

Fig. 9.

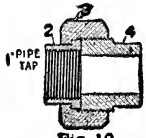

Fig. 10.

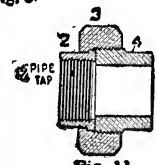

Fig. 11.

PLATE 09.

DETAIL PARTS OF ENGINE AND TENDER BRAKE APPARATUS.

FIG. 1.

Standard Duplex Air Gauge.

FIG. 2.

Semaphore Air Gauge.

FIG. 3.

One-inch by One-half inch Brake-Pipe Air Strainer, complete.

No.
2. Strainer Body.
3. One-inch Union Swivel.
4. Union Nut.
5. Union Gasket.
6. Strainer.

FIG. 4.

One-inch Steam Valve, complete.

No.
2. Hand Wheel.
3. Valve Stem.
4. Packing Nut.
5. Packing Gland.
6. Neck Piece.
7. Union Nut.
8. Valve Body.
9. Union Swivel.*
10. Valve Stud.*
11. Hand-Wheel Screw
12. Hand-Wheel Washer
13. Hand-Wheel Socket.
14. Steam-Pipe Swivel.

FIG. 5.

Plain Triple-Valve Bracket.

FIG. 6.

Tender Drain Cup, complete.

No.
1. Tender Drain Cup.
2. Tender Drain Cock.

FIG. 7.

Plain Triple-Valve Nipple.

FIG. 8.

One-inch by One and One-fourth inch Angle Fitting.

FIG. 9.

Three-fourths inch Reservoir Union, complete.

No.
2. Union Swivel.
3. Union Nut.
4. Union Stud.

FIG. 10.

One-inch Reservoir Union, complete.

No.
2. Union Swivel.
3. Union Nut.
4. Union Stud.

FIG. 11.

One and One-fourth inch Reservoir Union, complete.

No.
2. Union Swivel.
3. Union Nut.
4. Union Stud.

PLATE G14.

PRESSURE HEADS FOR BRAKE CYLINDERS.

Fig. 1.

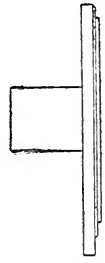

Fig. 2.

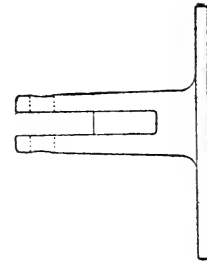

Fig. 3.

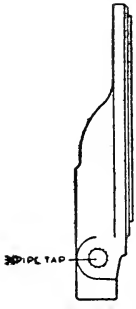

Fig. 4.

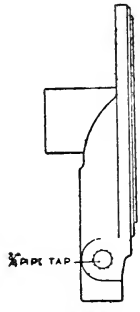

Fig. 5.

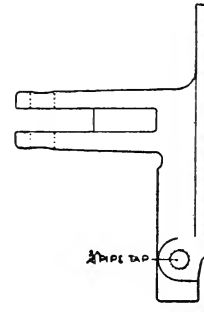

Fig. 6.

EXPLANATION OF TYPES ILLUSTRATED.

Fig. 1. Type O—Plain Head.
Fig. 2. Type P—Plain Head with Slack Adjuster Lug.
Fig. 3. Type Q—Bracket Head.
Fig. 4. Type R—Quick-Action Triple Valve Head.
Fig. 5. Type S—Quick-Action Triple Valve Head with Slack Adjuster Lug.
Fig. 6. Type T—Quick-Action Triple Valve Head with Bracket.

PLATE F15.

STANDARD PUSH-DOWN TYPE DRIVER-BRAKE CYLINDERS.

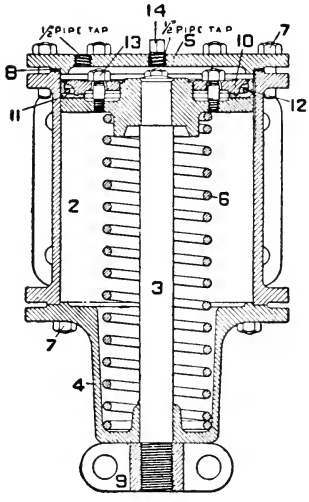

OUTER FLANGES FULL.

Cylinder No.	Diameter.		Stroke.
11	8 in.	x	7 in.
13	12 "	x	8 "
15	12 "	x	10 "
30	10 "	x	6 "
33	8 "	x	6 "
35	10 "	x	10 "
39	12 "	x	12 "
42	14 "	x	12 "
47	16 "	x	12 "
48	6 "	x	8 "
49	12 "	x	7 "
50	13 "	x	12 "
51	10 "	x	6 "
55	10 "	x	8 "
66	6 "	x	6 "
99	10 "	x	12 "

OUTER FLANGES REMOVED.

Cylinder No.	Diameter.		Stroke.
22	8 in.	x	7 in.
31	10 "	x	6 "
36	10 "	x	10 "
40	12 "	x	12 "
44	8 "	x	6 "
77	6 "	x	6 "
88	10 "	x	8 "

No.
2. Cylinder Body.
3. Piston and Rod (includes Follower Studs and Nuts).
4. Non-Pressure Head.
5. Pressure Head.
6. Release Spring.
7. Cylinder-Head Bolt and Nut.
8. Cylinder Gasket.

No.
9. Cross Head (select kind desired from Plate F 22).
10. Follower.
11. Packing Leather.
12. Packing Expander.
13. Follower Stud and Nut.
14. Oil Plug.

PLATE F17.

STANDARD PUSH-UP TYPE DRIVER-BRAKE CYLINDERS.

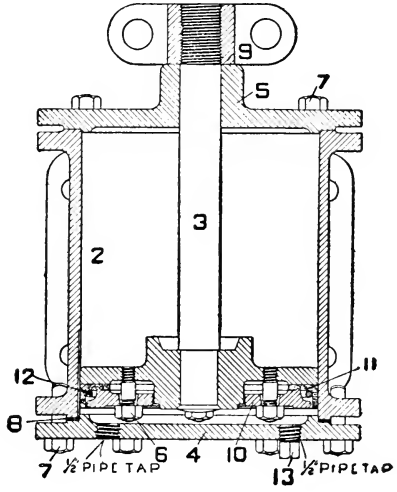

OUTER FLANGES FULL.

Cylinder No.	Diameter.		Stroke.
16	8 in.	x	7 in.
18	10 "	x	8 "
23	12 "	x	10 "
46	12 "	x	8 "

OUTER FLANGES REMOVED.

Cylinder No.	Diameter.		Stroke.
17	8 in.	x	7 in.
19	10 "	x	8 "

No.

2. Cylinder Body.
3. Piston and Rod (includes Follower Studs and Nuts).
4. Pressure Head.
5. Non-Pressure Head.
6. Follower Stud and Nut.
7. Cylinder-Head Bolt and Nut.

No.

8. Cylinder Gasket.
9. Cross Head (select kind desired from Plate F 22).
10. Follower.
11. Packing Leather.
12. Packing Expander.
13. Oil Plug.

PLATE F19.

STANDARD TYPE "B" PUSH DRIVER-BRAKE CYLINDERS.

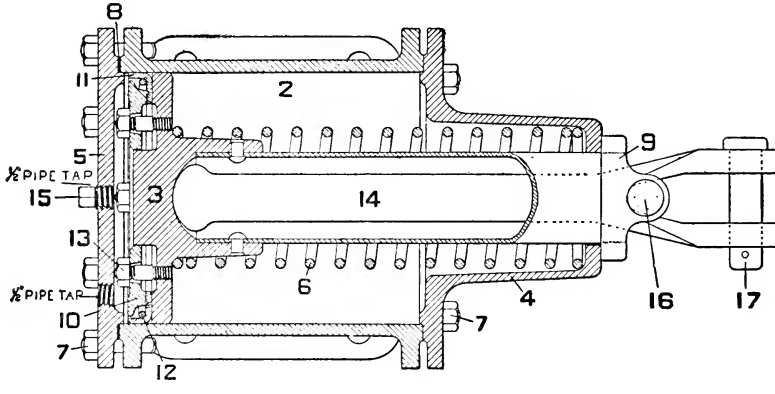

OUTER FLANGES FULL.

Cylinder No.	Diameter.		Stroke.
11-B	8 in.	x	7 in.
13-B	12 "	x	8 "
15-B	12 "	x	10 "
21-B	14 "	x	10 "
33-B	8 "	x	6 "
35-B	10 "	x	10 "
39-B	12 "	x	12 "
42-B	14 "	x	12 "
47-B	16 "	x	12 "
48-B	6 "	x	8 "
49-B	12 "	x	7 "
50-B	13 "	x	12 "
51-B	10 "	x	6 "
55-B	10 "	x	8 "
90-B	10 "	x	12 "

OUTER FLANGES REMOVED.

Cylinder No.	Diameter.		Stroke.
22-B	8 in.	x	7 in.
36-B	10 "	x	10 "
44-B	8 "	x	6 "
88-B	10 "	x	8 "

No.
2. Cylinder Body.
3. Piston and Rod (includes No. 9, and Follower Studs and Nuts).
4. Non-Pressure Head.
5. Pressure Head.
6. Release Spring.
7. Cylinder-Head Bolt and Nut.
8. Cylinder Gasket.
9. Push-Rod Holder.

No.
10. Follower.
11. Packing Leather.
12. Packing Expander.
13. Follower Stud and Nut.
14. Push Rod, complete (includes Nos. 15 and 16).
15. Oil Plug.
16. Push-Rod-Holder Pin, with Cotter
17. Push-Rod Pin, with Cotter.

PLATE F 20.

STANDARD TYPE "C" PUSH DRIVER-BRAKE CYLINDERS.

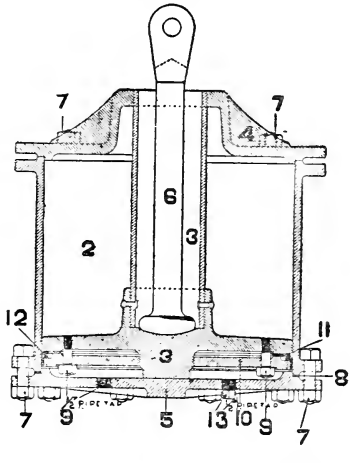

OUTER FLANGES FULL.

Cylinder No.	Diameter.		Stroke.
11-C	8 in.	x	7 in.
13-C	12 "	x	8 "
15-C	12 "	x	10 "
21-C	14 "	x	10 "
30-C	10 "	x	6 "
33-C	8 "	x	6 "
35-C	10 "	x	10 "
39-C	12 "	x	12 "
42-C	14 "	x	12 "
55-C	10 "	x	8 "
99-C	10 "	x	12 "

OUTER FLANGES REMOVED.

Cylinder No.	Diameter.		Stroke.
22-C	8 in.	x	7 in.
31-C	10 "	x	6 "
36-C	10 "	x	10 "
44-C	8 "	x	6 "
88-C	10 "	x	8 "

No.

2. Cylinder Body.
3. Piston and Rod (includes Follower Studs and Nuts).
4. Non-Pressure Head.
5. Pressure Head.
6. Push Rod, complete.
7. Cylinder-Head Bolt and Nut.

No.

8. Cylinder Gasket.
9. Follower Stud and Nut.
10. Follower.
11. Packing Leather.
12. Packing Expander.
13. Oil Plug.

PLATE F 21.

STANDARD TYPE "D" ENGINE-TRUCK BRAKE CYLINDERS.

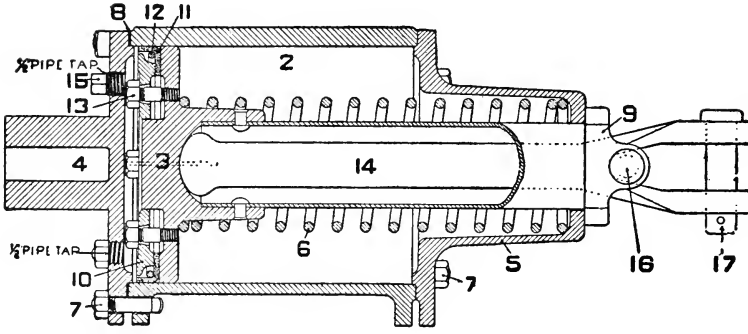

Cylinder No.	Diameter.		Stroke.
11-D	8 in.	x	7 in.
35-D	10 "	x	10 "
43-D	8 "	x	12 "
48-D	6 "	x	8 "
49-D	12 "	x	7 "
55-D	10 "	x	8 "
66-D	6 "	x	6 "
99-D	10 "	x	12 "

No.

2. Cylinder Body.
3. Piston and Rod (includes No. 9, and Follower Studs and Nuts).
4. Pressure Head.
5. Non-Pressure Head.
6. Release Spring.
7. Cylinder-Head Bolt and Nut.
8. Cylinder Gasket.
9. Push-Rod Holder.

No.

10. Follower.
11. Packing Leather.
12. Packing Expander
13. Follower Stud and Nut.
14. Push Rod, complete (includes Nos. 15 and 16).
15. Oil Plug.
16. Push-Rod-Holder Pin, with cotter.
17. Push-Rod Pin, with cotter.

PLATE F 22. PISTON CROSS HEADS FOR DRIVER-BRAKE CYLINDERS.

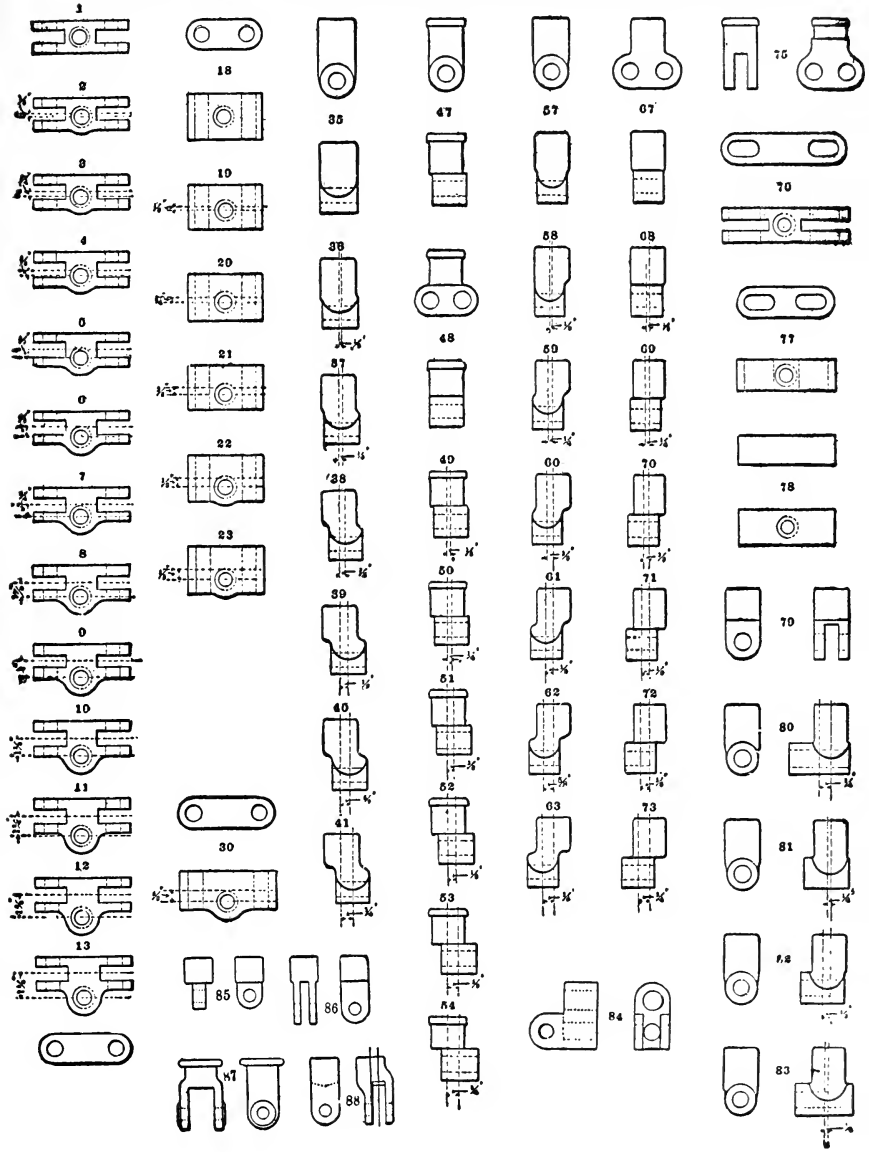

PLATE G23. RESERVOIRS.

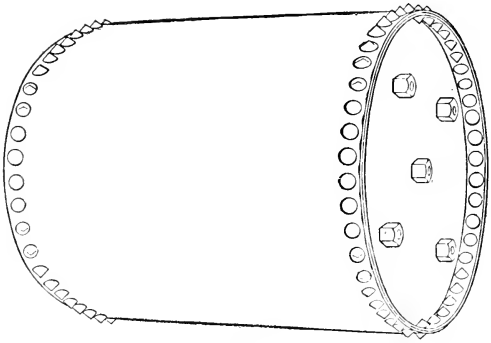

Fig. 1.

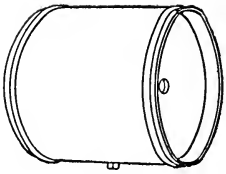

Fig. 4.

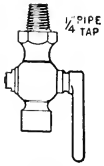

Fig. 5.

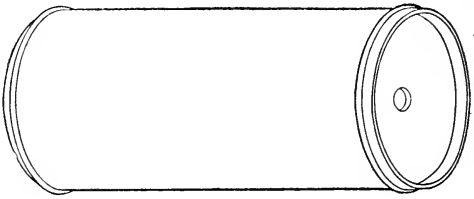

Fig. 2.

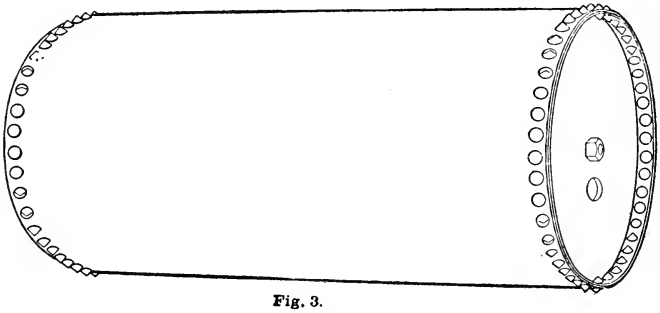

Fig. 3.

PLATE G 23.

RESERVOIRS.

FIG. 1

Main Reservoirs of the type illustrated, and of any desired length, are manufactured of the following standard diameters in inches, outside measurement; viz., 16, 18½, 20½, 22½, 24½, 26½, 28½, 30½, 32½, 34½, 36½ To ascertain approximate capacity in cubic inches, multiply the square of the inside diameter (which is ½ inch less than the size specified) by .7854, and the product by the length, less an allowance of three inches to cover flanges.

Main-Reservoir capacity for Passenger Engines should not be less than 20,000 cubic inches, and for Freight Engines, not less than 40,000 cubic inches.

FIG. 2.

Standard Auxiliary Reservoirs of the type illustrated are manufactured in the following sizes, and for use in connection with the Brake Cylinders specified:

10-in. by 24-in., for 8-in. Tender and Truck-Brake Cylinders.
10 " by 33 " " 8-in. Driver-Brake Cylinders.
12 " by 33 " " 10-in. Brake Cylinders of all kinds.
14 " by 33 " " 12-in. " " " "
16 " by 33 " " 14-in. " " " "

Auxiliary Reservoirs are tapped for pipe connections as follows:
10-in. by 24-in., for ½-inch pipe, all others for ¾-inch pipe.

FIG. 3.

Special Auxiliary Reservoir of the type illustrated, 18½-in. by 41-in. For 16-inch Driver-Brake Cylinders. Tapped for ¾-inch pipe.

FIG. 4.

Equalizing Reservoir, 10-in. by 12-in. For use in connection with Engineer's Brake Valve. Tapped for ⅜-inch pipe.

FIG. 5.

Reservoir Drain Cock.

PLATE G 24. PLAIN TRIPLE VALVE.

FOR 8-INCH, AND 10-INCH CYLINDERS

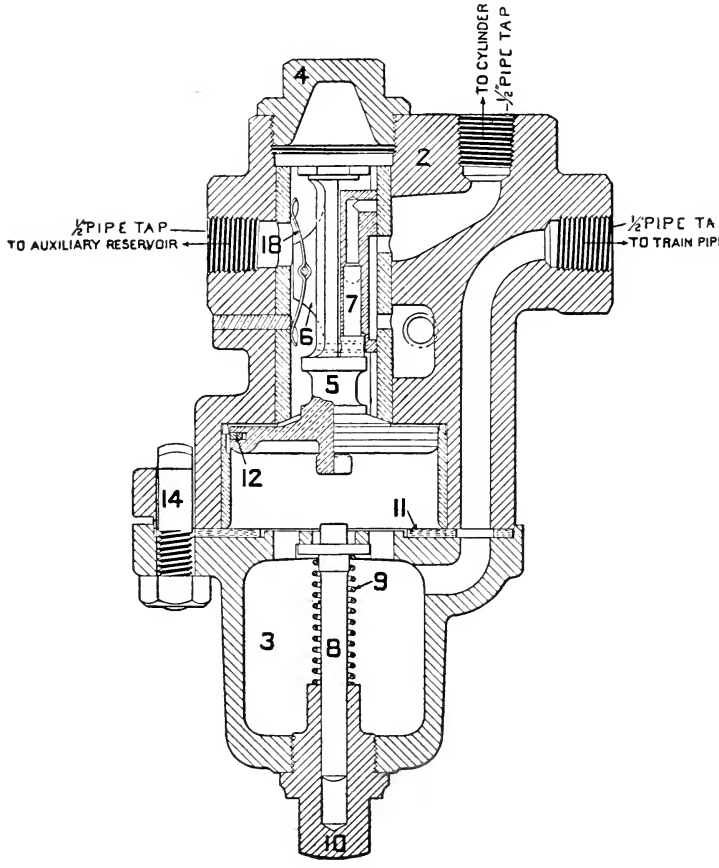

PLATE G 24.

PLAIN TRIPLE VALVE.

FOR 8-INCH, AND 10-INCH CYLINDERS.

No. 1. "G 24" Plain Triple Valve, complete.

No.		No.	
2.	Triple-Valve Body (bushed)	9.	*Graduating Spring.
3.	Cylinder Cap.	10.	Graduating-Stem Nut.
4.	Cap Nut.	11.	Cylinder Gasket.
5.	Piston (includes No. 12)	12.	Packing Ring.
6.	Slide Valve.	14.	Bolt.
7.	Graduating Valve.	18.	Slide-Valve Spring.
8.	Graduating Stem.		

*GRADUATING SPRING SPECIFICATIONS. Phosphor-Bronze Spring Wire, No. 14 B. W G.; $\frac{5}{1000}$ inches in diameter; 12 coils, 2 1/2 inches free height, $\frac{3}{8}$ inches inside diameter.

PLATE F 25. PLAIN TRIPLE VALVE.

FOR 12-INCH, 14-INCH, AND 16-INCH DRIVER-BRAKE CYLINDERS.

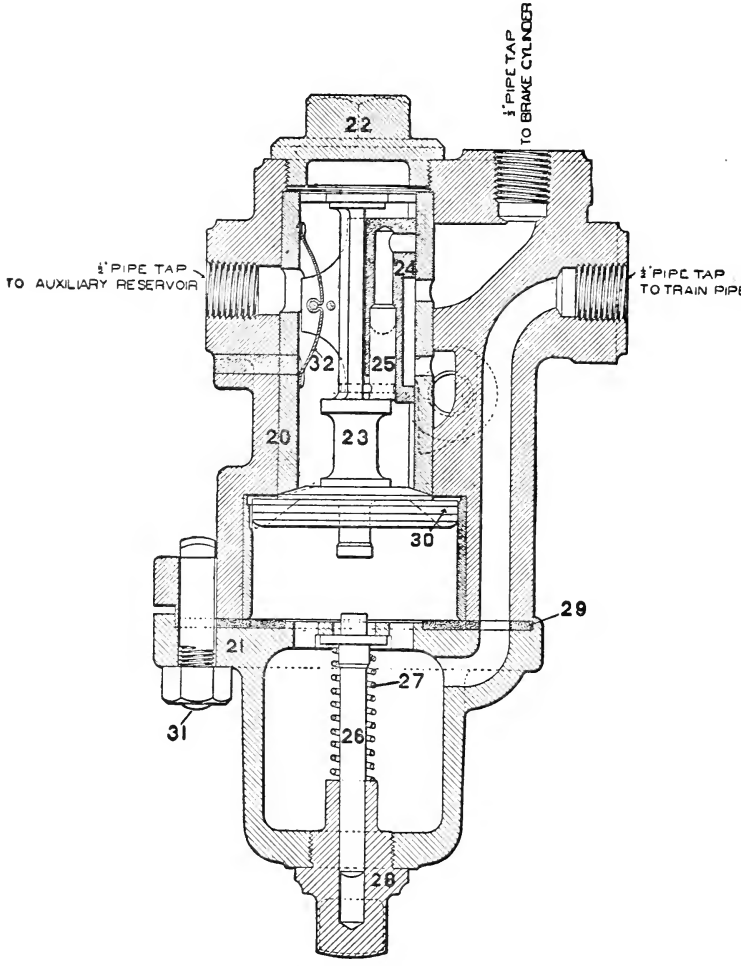

NOTE.—The "F 25" Plain Triple Valve should be used with 12-inch, 14-inch, and 16-inch Driver-Brake Cylinders, with or without Truck Brake; and for no other purpose.

PLATE F25.

PLAIN TRIPLE VALVE.

FOR 12-INCH, 14-INCH, AND 16-INCH DRIVER-BRAKE CYLINDERS.

No. 1. "F25" Plain Triple Valve, complete.

No.	
20.	Triple-Valve Body (bushed).
21.	Cylinder Cap.
22.	Cap Nut.
23.	Piston (includes No. 30).
24.	Slide Valve.
25.	Graduating Valve.
26.	Graduating Stem.
27.	Graduating Spring.
28.	Graduating-Stem Nut.
29.	Cylinder Gasket.
30.	Packing Ring.
31.	Bolt and Nut.
32.	Slide-Valve Spring.

PLATE G 26.

TENDER-BRAKE CYLINDERS.

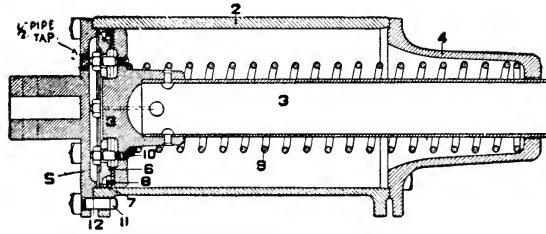

No. 1. Tender-Brake Cylinder, complete.

No.
2. Cylinder Body.
3. Piston and Rod (includes Follower Studs and Nuts).
4. Non-Pressure Head.
*5. Pressure Head.
6. Follower.

No.
7. Packing Leather.
8. Packing Expander.
9. Release Spring.
10. Follower Stud and Nut.
11. Cylinder-Head Bolt and Nut.
12. Cylinder Gasket.

* NOTE.—For locomotive tenders, the light weight of which does not exceed 35,000 pounds, use the 8-inch Tender-Brake Cylinder; for tenders of greater weight, use the 10-inch size. The style of cylinder head, illustrated above, viz., "Plain Head, with Slack-adjuster Lug," is considered standard.

PLATE F 27. QUICK-ACTION PASSENGER TRIPLE VALVE.

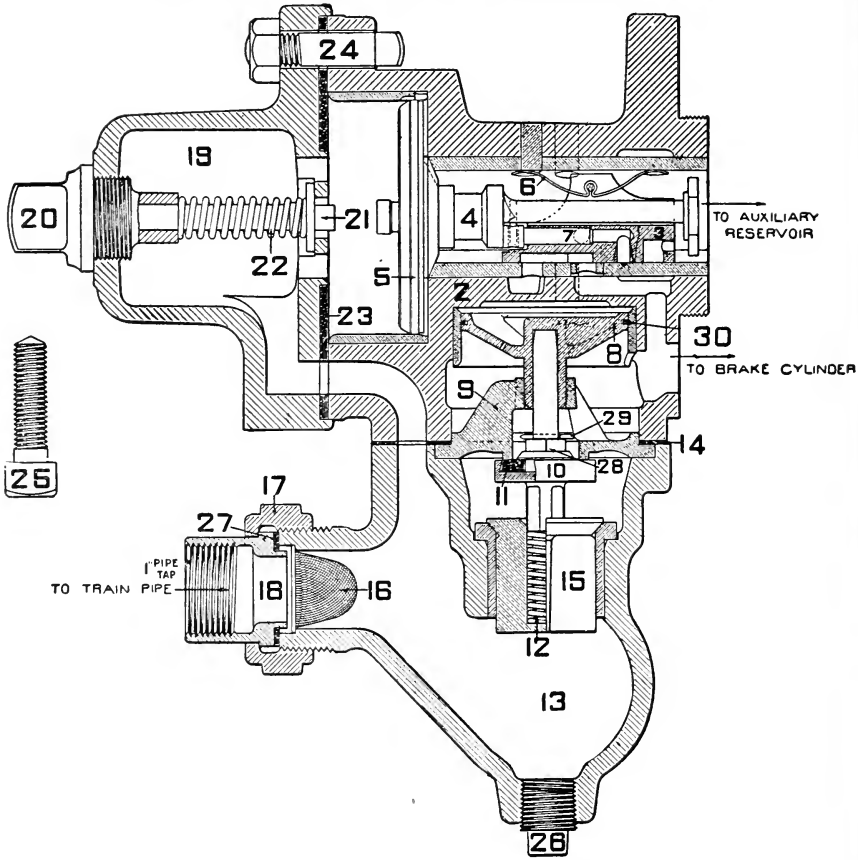

NOTE.—The "F 27" Triple Valve should be used in connection with the following apparatus only:

Passenger-Car Brake Cylinders, 10 inches AND LESS in diameter;

High-Speed Tender-Brake Cylinders, 10 inches in diameter.

Though similar in appearance, this valve differs essentially from the "F 36," or Freight Triple-Valve, and should never be employed in connection with Freight-Car Brakes. In common with the other Passenger Triple, "F 29," it may be distinguished from the Freight Triple by the fact that it has but one exhaust outlet while the "F 36" Valve has two. The three Quick-Action Triple-Valves may be identified also by the bore of the Slide-Valve Bush which measures 1 3/8 inches in the "F 27," 1 3/4 inches in the "F 29," and 1 1/4 inches in the "F 36" Valve.

PLATE F27.

QUICK-ACTION PASSENGER TRIPLE VALVE.

No. 1. "F 27" Quick-Action Passenger Triple Valve, complete.

No.
2. Triple-Valve Body (bushed).
3. Slide Valve.
4. Piston (includes No. 5).
5. Packing Ring.
6. Slide-Valve Spring.
7. Graduating Valve.
8. Emergency-Valve Piston.
9. Emergency-Valve Seat.
10. Emergency Valve.
11. Rubber Seat.
12. Check-Valve Spring.
13. Check-Valve Case (bushed).
14. Check-Valve-Case Gasket.
15 Check Valve.
16. Strainer.

No.
17. Union Nut.
18. Union Swivel.
19. Cylinder Cap.
20. Graduating-Stem Nut.
21. Graduating Stem.
22. *Graduating Spring.
23. Cylinder-Cap Gasket.
24. Bolt and Nut.
25. Half-inch Cap Screw.
26. Half-inch Plug.
27. Union Gasket.
28. Emergency-Valve Nut.
29. Cotter Pin.
30. Emergency-Valve Piston Packing Ring.

*GRADUATING SPRING SPECIFICATIONS: Eight one hundredths ($\frac{8}{100}$) inches diameter, Nickeled Steel "Piano" Wire; 13 1/4 coils; 2 5/8 inches free height; $\frac{29}{64}$ inches inside diameter.

PLATE F28.

TEN-INCH PASSENGER-CAR BRAKE CYLINDERS.

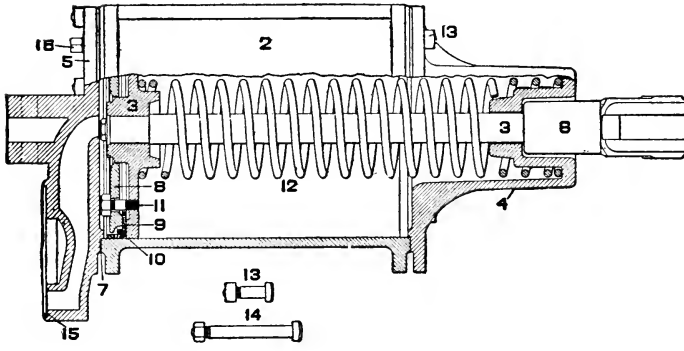

No. 1. Ten-inch Passenger-Car Brake Cylinder, complete.

No.
2. Cylinder Body.
3. Piston and Rod (includes Follower Studs and Nuts).
4. Non-Pressure Head.
5. Pressure Head (includes 2 of No. 14).
6. Cross Head.
7. Cylinder Gasket.
8. Follower.

No.
9. Packing Leather.
10. Packing Expander.
11. Follower Stud and Nut.
12. Release Spring.
13. Cylinder-Head Bolt and Nut.
14. Triple-Valve Bolt and Nut.
15. Triple-Valve Gasket.
16. Half-inch Plug.

PLATE F29. QUICK-ACTION PASSENGER TRIPLE VALVE.

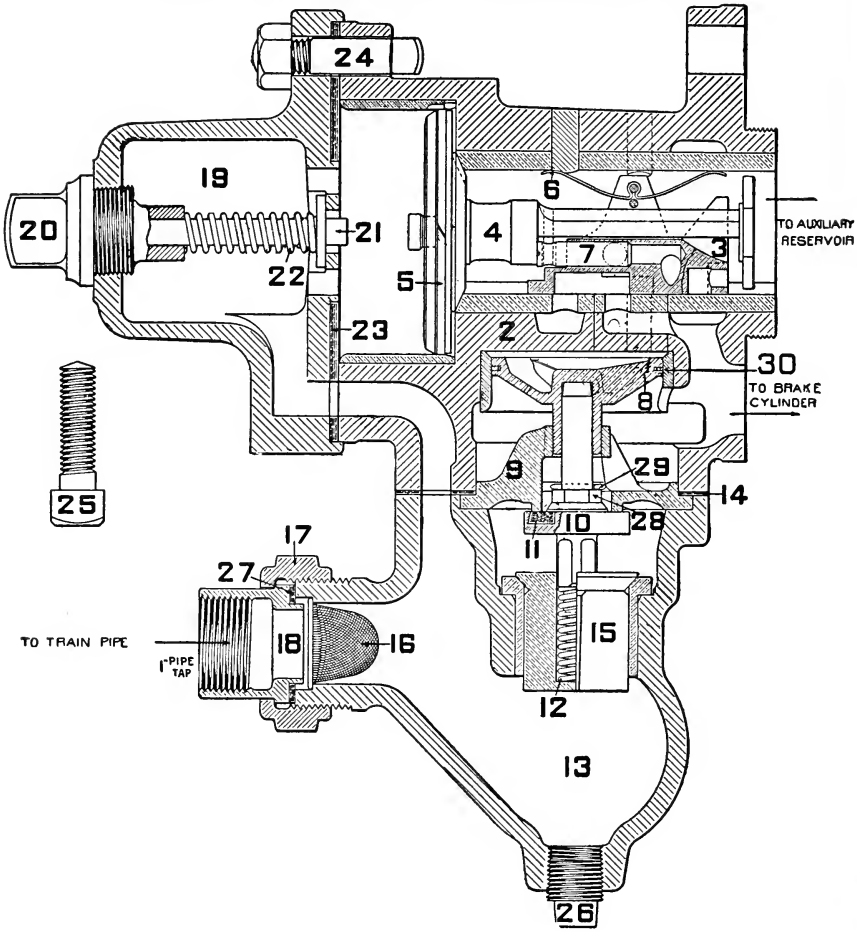

NOTE.—The "F 29" Triple Valve should be used in connection with Passenger-Car Brake Cylinders, 12 and 14 inches in diameter.

Though similar in appearance this valve differs essentially from both the "F 27" and "F 36" Triples, and should never be employed except as specified. It may be easily recognized by means of the letter "O" cast on the valve body. In common with the other Passenger Triple, "F 27," it may be distinguished from the Freight Triple by the fact that it has but one exhaust outlet while the "F 36" valve has two. The three Quick-Action Triple-Valves may be identified also by the bore of the Slide-Valve Bush which measures 1 3/8 inches in the "F 27," 1 3/4 inches in the "F 29," and 1 1/4 inches in the "F 36" Valve.

PLATE F 29.

QUICK-ACTION PASSENGER TRIPLE VALVE.

No. 1. "F 29" Quick-Action Passenger Triple Valve, complete.

No.
2. Triple-Valve Body (bushed).
3. Slide Valve.
4. Piston (includes No. 5).
5. Packing Ring.
6. Slide-Valve Spring.
7. Graduating Valve.
8. Emergency-Valve Piston.
9. Emergency-Valve Seat.
10. Emergency Valve.
11. Rubber Seat.
12. Check-Valve Spring.
13. Check-Valve Case (bushed).
14. Check-Valve-Case Gasket.
15. Check Valve.
16. Strainer.

No.
17. Union Nut.
18 Union Swivel.
19. Cylinder Cap.
20. Graduating-Stem Nut.
21. Graduating Stem.
22. *Graduating Spring.
23. Cylinder-Cap Gasket.
24. Bolt and Nut.
25. Half-inch Cap Screw.
26. Half-inch Plug.
27. Union Gasket.
28. Emergency-Valve Nut.
29. Cotter Pin.
30. Emergency-Valve Piston Packing Ring.

*GRADUATING SPRING SPECIFICATIONS: Eight one hundredths ($\frac{8}{100}$) inches diameter Nickeled Steel "Piano" Wire; 13 1/4 coils; 2 5/8 inches free height; $\frac{33}{64}$ inches inside diameter.

PLATE F 30.

TWELVE-INCH PASSENGER-CAR BRAKE CYLINDER.

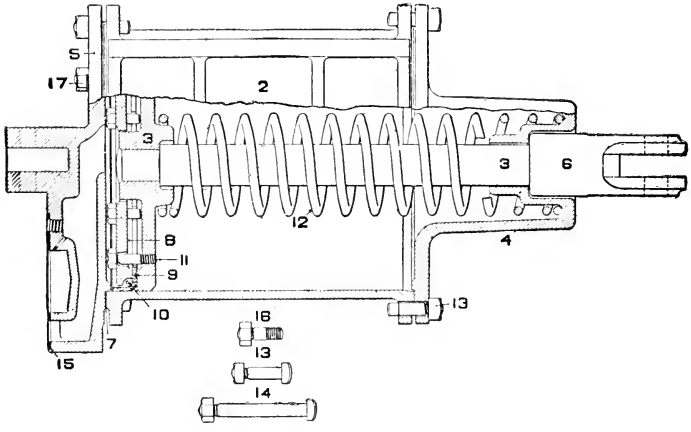

No. 1. Twelve-inch Passenger-Car Brake Cylinder, complete.

No.
2. Cylinder Body.
3. Piston and Rod (includes Follower Studs and Nuts).
4. Non-Pressure Head.
5. Pressure Head (includes No. 16, and 2 of No. 14).
6. Cross Head.
7. Cylinder Gasket.
8. Follower.

No.
9. Packing Leather.
10 Packing Expander.
11. Follower Stud and Nut.
12. Release Spring.
13. Cylinder-Head Bolt and Nut.
14. Triple-Valve Bolt and Nut.
15. Triple-Valve Gasket.
16. Triple-Valve Stud and Nut.
17. Half-inch Plug.

PLATE F 31.

FOURTEEN-INCH PASSENGER-CAR BRAKE CYLINDER.

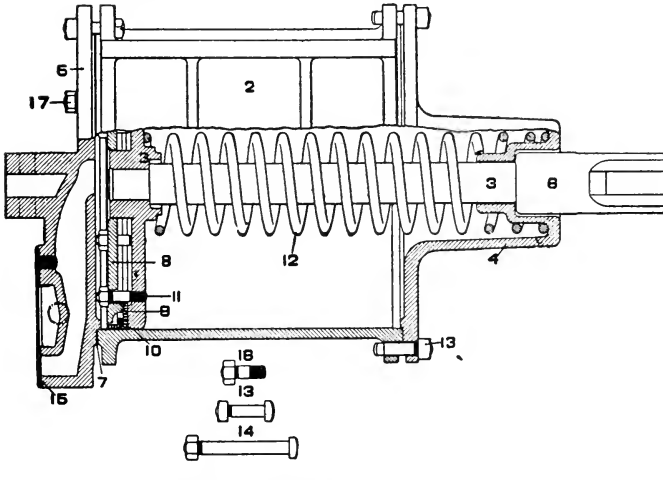

No. 1. Fourteen-inch Passenger-Car Brake Cylinder, complete.

No.
2. Cylinder Body.
3. Piston and Rod (includes Follower Studs and Nuts)
4. Non-Pressure Head.
5. Pressure Head (includes No. 16, and 2 of No. 14).
6. Cross Head.
7. Cylinder Gasket.
8. Follower.

No.
9. Packing Leather.
10. Packing Expander.
11. Follower Stud and Nut.
12. Release Spring.
13. Cylinder-Head Bolt and Nut.
14. Triple-Valve Bolt and Nut.
15. Triple-Valve Gasket.
16. Triple-Valve Stud and Nut.
17. Half-inch Plug.

PLATE G 32. DETAIL PARTS OF PASSENGER-CAR BRAKE APPARATUS.

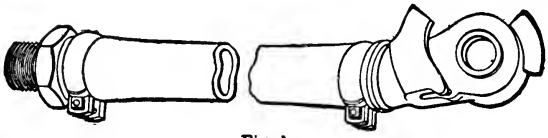

Fig. 1.

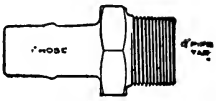

Fig. 3.

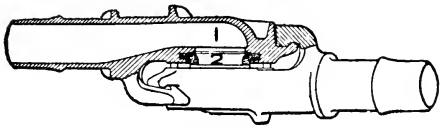

Fig. 2.

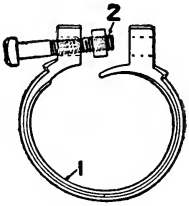

Fig. 4.

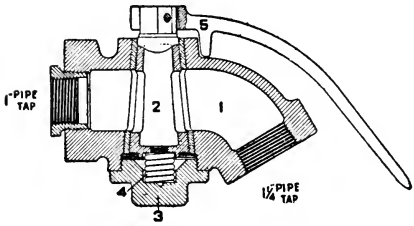

Fig. 5.

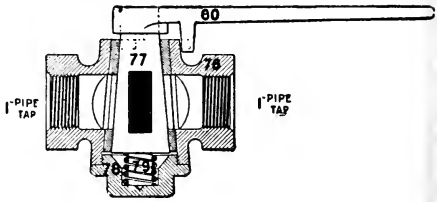

Fig. 6.

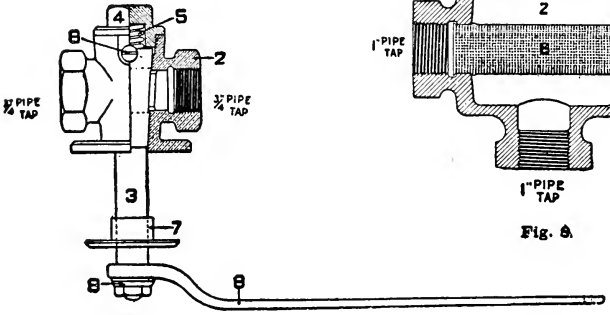

Fig. 7.

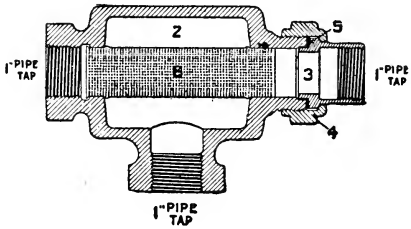

Fig. 8.

Fig. 9.

PLATE G32.

DETAIL PARTS OF PASSENGER-CAR BRAKE APPARATUS.

FIG. 1.

Standard One-inch Hose and Coupling, complete.

Hose 22 inches long (order in pairs.)

FIG. 2.

Standard One-inch Hose Coupling (order in pairs).

No.
1. Hose-Coupling Case.
2. Hose-Coupling Packing Ring.

FIG. 3.

One-inch by One and One-fourth inch Hose Nipple.

FIG. 4.

One-inch Hose Clamp, complete.

No.
1. One-inch Hose Clamp.
2. One-inch Hose-Clamp Bolt.

FIG. 5.

One-inch by One and One-fourth inch Angle Cock, complete.

No.
1. Angle-Cock Body.
2. Angle-Cock Key.
3. Angle-Cock Cap.
4. Angle-Cock-Key Spring.
5. Angle-Cock Handle.
6. One and One-fourth inch to One-inch Reducer.

FIG. 6.

One-inch Cut-out Cock, complete.

No.
76. Cock Body.
77. Cock Key.
78. Cock Cap.
79. Key Spring.
80. Handle.

FIG. 7.

Conductor's Valve, complete.

No.
2. Valve Body.
3. Valve Key.
4. Valve Cap.
5. Key Spring.
6. Key Stop.
7. Key Escutcheon.
8. Valve Handle.
9. Key Nut.

FIG. 8.

One-inch Brake-Pipe Air Strainer, complete.

No.
2. Strainer Body.
3. One-inch Union Swivel.
4. Union Nut.
5. Union Gasket.
6. Strainer.

FIG. 9.

One-inch Dummy Coupling.

PLATE F 33.

Westinghouse Standard Train Air-Signal Equipment.—*Opposite.*

QUIPMENT.

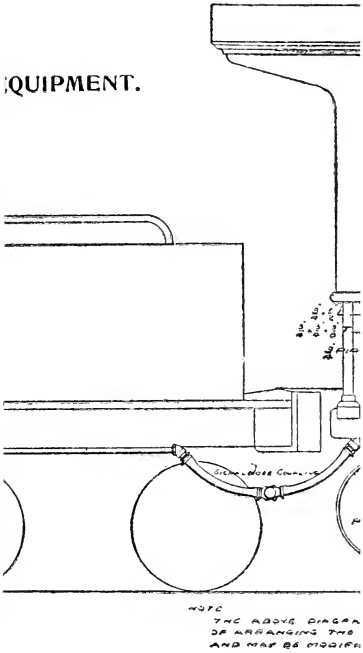
NOTE
THE ABOVE DIAGRA
OF ARRANGING THE
AND MAY BE MODIFI

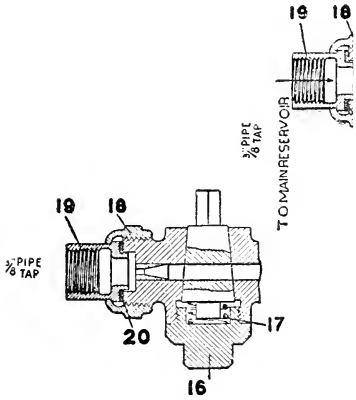
19
18
3/8" PIPE TAP
TO MAIN RESERVOIR
19
18
3/8" PIPE TAP
20
17
16

PLATE F33.

WESTINGHOUSE STANDARD TRAIN AIR-SIGNAL EQUIPMENT.

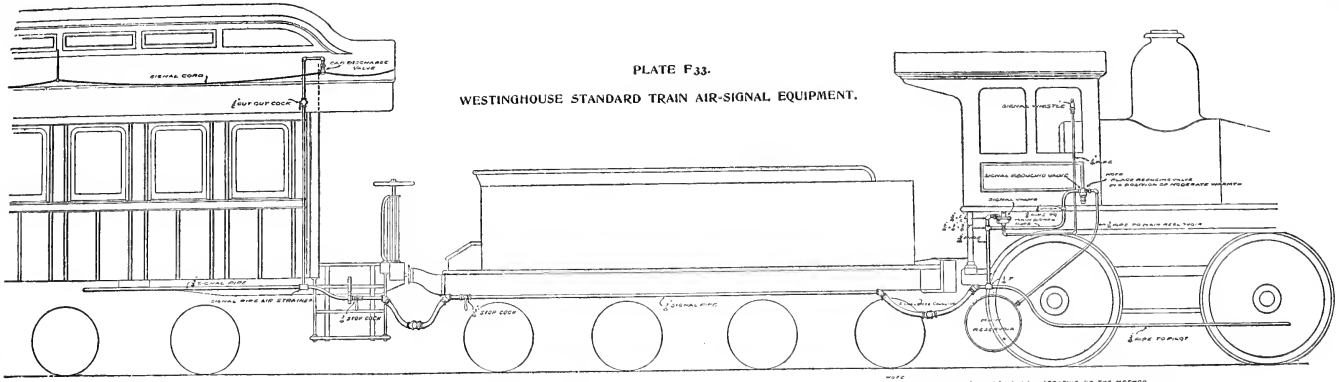

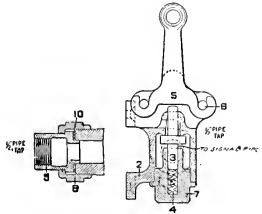

FIG. 1

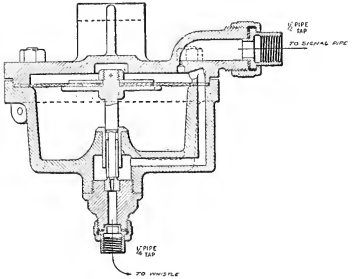

FIG. 2

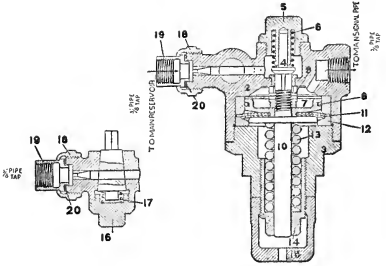

FIG. 3

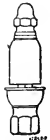

FIG. 4

PLATE F33.

STANDARD TRAIN AIR-SIGNAL APPARATUS.

Fig. 1.

Car Discharge Valve, complete.

No.
2. Discharge-Valve Body.
3. Discharge-Valve Stem.
4. Discharge-Valve Spring.
5. Discharge-Valve Handle.
6. Stop Pin.
7. Cap Nut.
8. Union Nut.
9. Union Swivel.
10. Union Gasket.

Fig. 2.

Signal Valve, complete.

Fig. 3.

***Improved Reducing Valve, complete.**

No.
2. Reducing-Valve Body (bushed).
3. Spring Box.
4. Supply Valve.
5. Supply-Valve Cap Nut.
6. Supply-Valve Spring.
7. Reducing-Valve Piston (includes No. 8).
8. Piston Packing Ring
9. Piston Nut.
10. Piston Rod.
11. Diaphragm (two pieces).
12. Diaphragm Ring
13. Regulating Spring.
14. Regulating Nut.
15. Check Nut.
16. Cock Cap Nut.
17. Cock Spring.
18. Union Nut.
19. Union Swivel.
20. Union Gasket.

*The improved Reducing Valve is adjusted to govern Train Signal-Pipe Pressure AT A MAXIMUM OF 40 POUNDS PER SQUARE INCH, and any necessary readjustment must be made for that pressure in order to secure the best results.

Fig. 4.

Signal Whistle, complete.

PLATE G 34. DETAIL PARTS OF TRAIN AIR-SIGNAL APPARATUS.

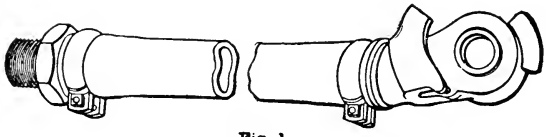

Fig. 1.

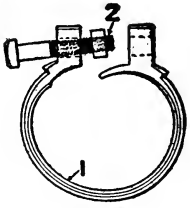

Fig. 3.

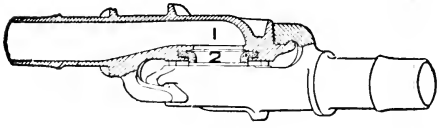

Fig. 2.

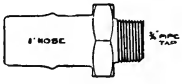

Fig. 4.

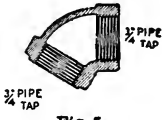

Fig. 5.

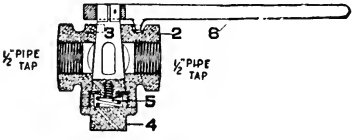

Fig. 6.

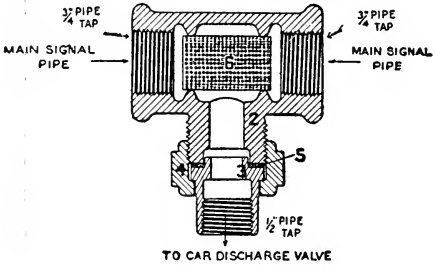

Fig. 7.

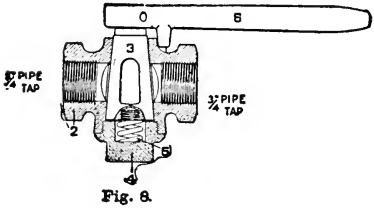

Fig. 8.

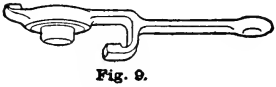

Fig. 9.

PLATE G34.

DETAIL PARTS OF TRAIN AIR-SIGNAL APPARATUS.

FIG. 1.

Standard Signal Hose and Coupling, complete.

One-inch Hose, 22 inches long with fittings for ¾-inch pipe.

FIG. 2.

Standard Signal Hose Coupling, complete (order in pairs).

No.
1. Signal Hose-Coupling Case.
2. Signal Hose-Coupling Packing Ring.

FIG. 3.

Signal Hose Clamp, complete.

No.
1. Signal Hose-Clamp Body.
2. Signal Hose-Clamp Bolt.

FIG. 4.

One-inch by Three-fourths inch Hose Nipple.

FIG. 5.

Three-fourths inch Angle Fitting.

FIG. 6.

One-half inch Cut-out Cock, complete.

No.
2. Cock Body.
3. Cock Key.
4. Cock Cap.
5. Key Spring.
6. Cock Handle.

FIG. 7.

Three-fourths inch Signal-Pipe Air Strainer, complete.

No.
2. Strainer Body.
3. Union Swivel.
4. Union Nut.
5. Union Gasket.
6. Strainer.

FIG. 8.

Three-fourths inch Cock, complete.

No.
2. Cock Body.
3. Cock Key.
4. Cock Cap.
5. Key Spring.
6. Cock Handle.

FIG. 9.

Signal Dummy Coupling.

PLATE G 35.

Westinghouse Standard Freight Car Brake Equipment.—*Opposite.*

CAR BRAKE

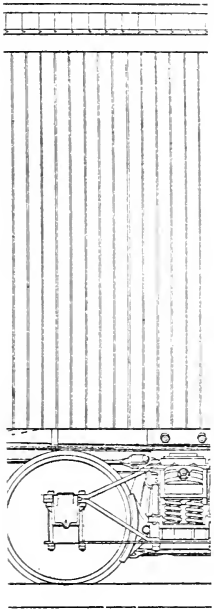

ING,
MLY
ONS

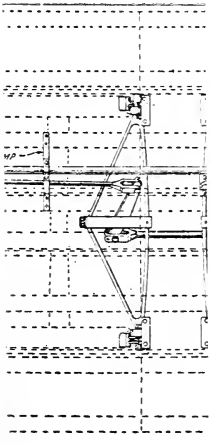

PLATE G35. WESTINGHOUSE STANDARD FREIGHT CAR BRAKE EQUIPMENT.

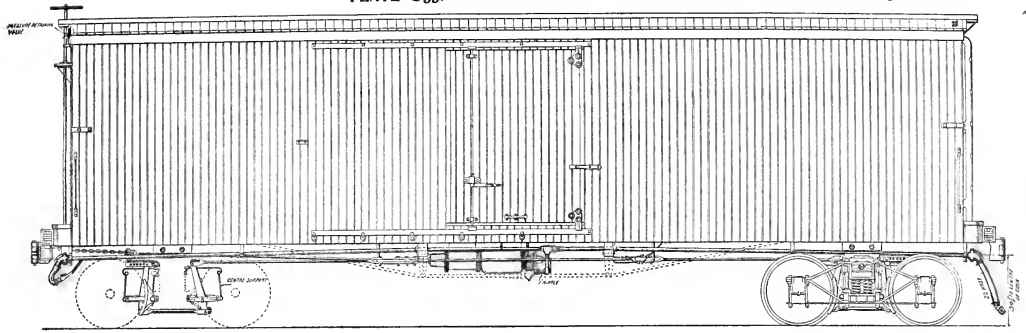

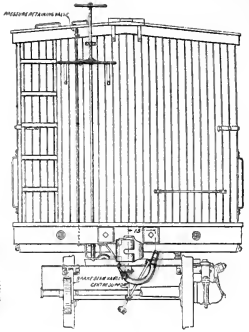

IMPORTANT SUGGESTIONS.

ALL BRAKE RODS, PINS, AND LEVERS ILLUSTRATED ARE M. C. B. STANDARD SIZES, AND NO DEVIATION THEREFROM SHOULD BE PERMITTED. IN PIPING, ELLS SHOULD NOT BE USED WHERE PRACTICABLE TO EMPLOY BENDS INSTEAD. REMOVE FINS CAREFULLY, BLOW OUT PIPES WITH STEAM, AND ATTACH FIRMLY TO CAR TIMBERS BY MEANS OF HEAVY CLAMPS. USE NO LEAD INSIDE OF SOCKETS; IF NEEDED, APPLY SPARINGLY ON OUTSIDE, AND TEST ALL CONNECTIONS UNDER PRESSURE WITH SOAPSUDS.

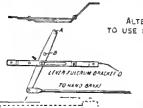

ALTERNATIVE ARRANGEMENT WHEN IT IS DESIRED TO USE HAND BRAKE ON BOTH ENDS OF THE CAR.

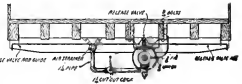

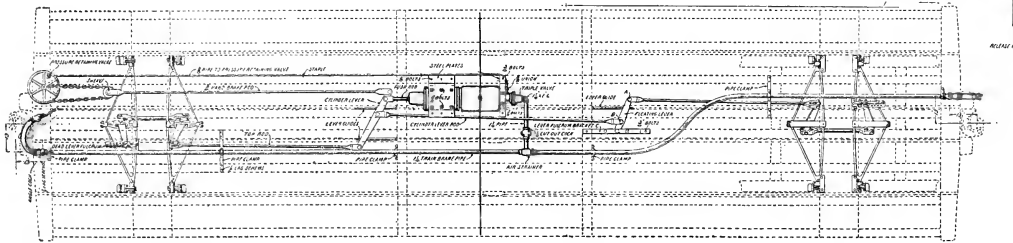

EXPLANATION OF TINTS.

STANDARD QUICK-ACTION AUTOMATIC BRAKE APPARATUS FURNISHED WITH COMPLETE FREIGHT-CAR EQUIPMENTS—"SCHEDULE H-1"—SHOWN IN ORANGE TINT.

PLATE F 36. QUICK-ACTION FREIGHT TRIPLE VALVE.

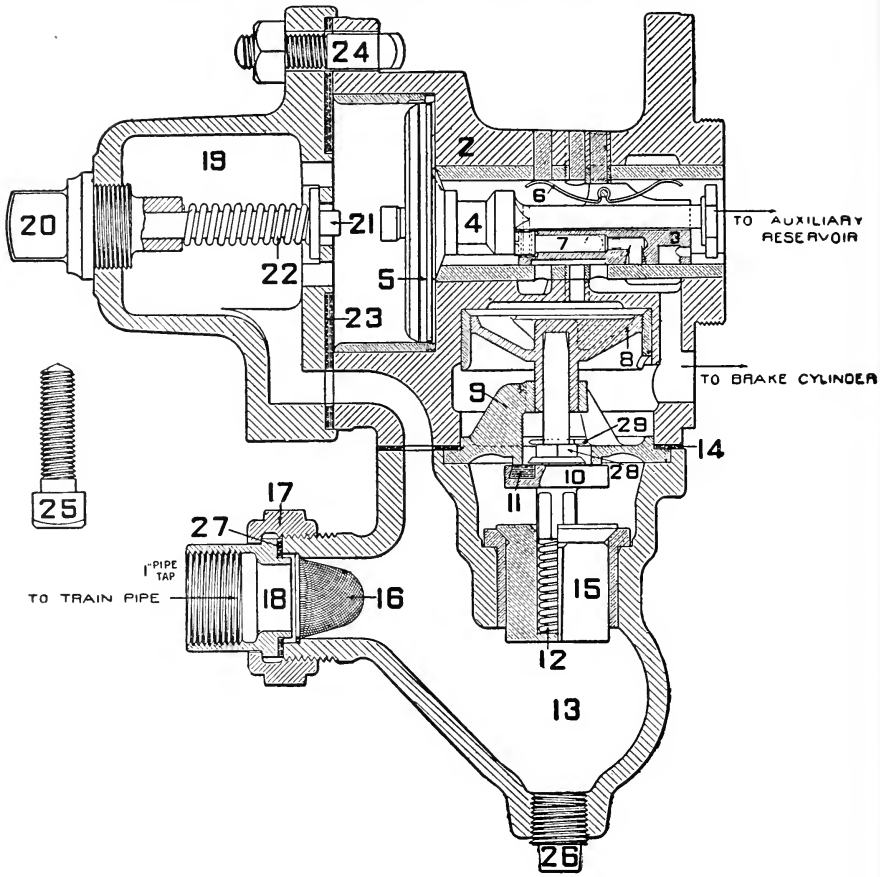

NOTE.—"F 36" Triple Valves should be used in connection with the following apparatus only:
Freight-Car Brake Cylinders, 6 inches and 8 inches in diameter.
High-Speed Tender-Brake Cylinders, 8 inches in diameter.

Though similar in appearance, this valve differs essentially from both the Passenger Triple Valves, and should never be employed except as specified. It may be distinguished from the "F 27" and "F 29" Quick-Action Triples by the fact that it has TWO exhaust outlets (one of which is plugged), and also by the bore of its Slide-Valve Bush, which is 1 1/4 inches in diameter.

PLATE F 36.

QUICK-ACTION FREIGHT TRIPLE VALVE.

No. 1. "F 36" Quick-Action Freight Triple Valve, complete.

No.		No.	
2.	Triple-Valve Body (bushed).	17.	Union Nut.
3.	Slide Valve.	18.	Union Swivel.
4.	Piston (includes No. 5).	19.	Cylinder Cap.
5.	Packing Ring.	20.	Graduating-Stem Nut.
6.	Slide-Valve Spring.	21.	Graduating Stem.
7.	Graduating Valve.	22.	*Graduating Spring.
8.	Emergency-Valve Piston.	23.	Cylinder-Cap Gasket.
9.	Emergency-Valve Seat.	24.	Bolt and Nut.
10.	Emergency Valve.	25.	Half-inch Cap Screw.
11.	Rubber Seat.	26.	Half-inch Plug.
12.	Check-Valve Spring.	27.	Union Gasket.
13.	Check-Valve Case.	28.	Emergency-Valve Nut.
14.	Check-Valve-Case Gasket.	29.	Cotter Pin.
15.	Check Valve.	30.	Plug for Exhaust Outlet.
16.	Strainer.		

*GRADUATING SPRING SPECIFICATIONS: Forty-nine one thousandths ($\frac{49}{1000}$) inches diameter. Nickeled Steel "Piano" Wire; 16 coils; 2 3/4 inches free height; $\frac{33}{64}$ inches inside diameter.

PLATE F 37.

NARROW-GAUGE FREIGHT-CAR BRAKE CYLINDER AND AUXILIARY RESERVOIR COMBINED, WITH "F 36" TRIPLE VALVE.

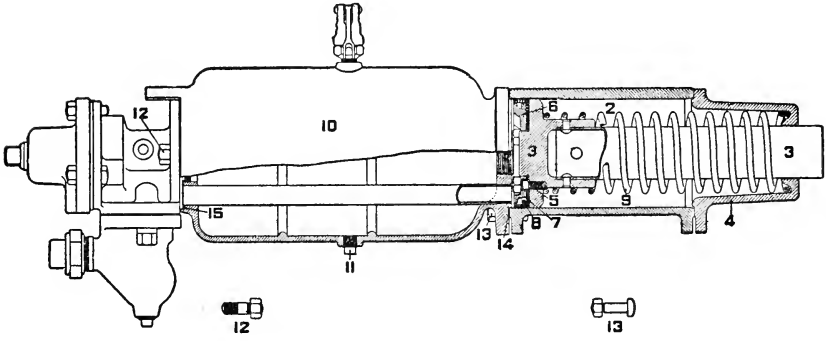

NOTE.-The "F 37" Brake Apparatus illustrated above is furnished with "Schedule H-4" for freight cars, the light weight of which does not exceed 15,000 pounds. The Brake Cylinder is 6 inches in diameter by 8 inches stroke.

No. 1. Narrow-Gauge Freight-Car Brake Cylinder and Auxiliary Reservoir Combined, with "F 36" Triple Valve, complete.

No.
2. Cylinder Body.
3. Piston and Rod (includes Follower Studs and Nuts).
4. Non-Pressure Head.
5. Follower Stud and Nut.
6. Follower.
7. Packing Leather.
8. Packing Expander.

No.
9. Release Spring.
10. Reservoir (includes Nos. 11 and 12).
11. Drain Plug.
12. Reservoir Stud and Nut.
13. Cylinder-Head Bolt and Nut.
14. Cylinder Gasket.
15. Triple-Valve Gasket.

PLATE F 38.

NARROW-GAUGE FREIGHT-CAR BRAKE CYLINDER AND AUXILIARY RESERVOIR, DETACHED, WITH "F 36" TRIPLE VALVE.

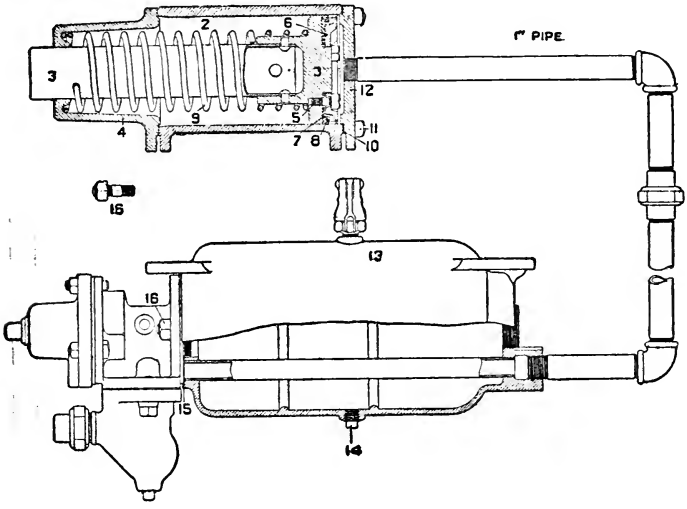

NOTE.—The "F 38" Brake Apparatus illustrated above is furnished with "Schedule H-5" for Freight Cars, the light weight of which does not exceed 15,000 pounds, but the construction of which prevents the application of the combined-cylinder-and-reservoir type of brake illustrated on Plate "F 37." The Brake Cylinder is 6 inches in diameter by 8 inches stroke.

Narrow-Gauge Freight-Car Brake Cylinder and Auxiliary Reservoir Detached, with "F 36" Triple Valve, complete.

No.
1. Brake Cylinder, complete.
2. Cylinder Body.
3. Piston and Rod (includes Follower Studs and Nuts).
4. Back Head.
5. Follower Stud and Nut.
6. Follower.
7. Packing Leather.
8. Packing Expander.

No.
9. Release Spring.
10. Cylinder Gasket.
11. Cylinder-Head Bolt and Nut.
12. Pressure Head.
13. Special Auxiliary Reservoir (includes Nos. 14 and 16).
14. Drain Plug.
15. Triple-Valve Gasket.
16. Reservoir Stud and Nut.

PLATE F39.

"TWIN-CYLINDER" FREIGHT-CAR BRAKE APPARATUS WITH AUXILIARY RESERVOIR DETACHED, AND "F36" TRIPLE VALVE.

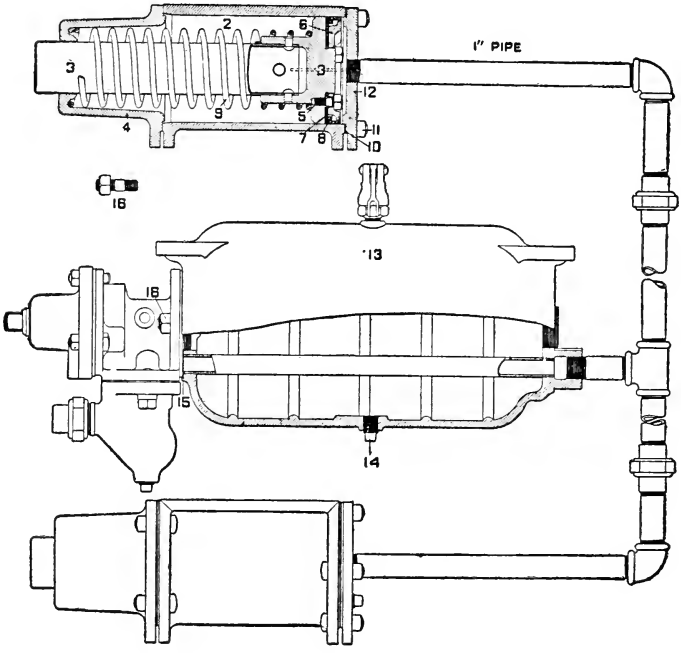

NOTE.—The "F 39" Brake Apparatus illustrated above is furnished with "Schedule H-6" for freight cars, the weight and construction of which prevents the use of a single-cylinder brake, either of the combined or detached type. Each of the cylinders illustrated is 6 inches in diameter by 8 inches stroke.

PLATE F39.

"TWIN-CYLINDER" FREIGHT-CAR BRAKE APPARATUS WITH AUXILIARY RESERVOIR DETACHED, AND "F36" TRIPLE VALVE.

"Twin-Cylinder" Freight-Car Brake Apparatus with Auxiliary Reservoir Detached, and "F36" Triple Valve, complete.

No.
1. Brake Cylinder, complete.
2. Cylinder Body.
3. Piston and Rod (includes Follower Studs and Nuts).
4. Non-Pressure Head.
5. Follower Stud and Nut
6. Follower.
7. Packing Leather.
8. Packing Expander.

No.
9. Release Spring.
10. Cylinder Gasket.
11. Cylinder-Head Bolt and Nut.
12. Pressure Head.
13. Special Auxiliary Reservoir (includes Nos. 14 and 16).
14. Drain Plug.
15. Triple-Valve Gasket.
16. Reservoir Stud and Nut.

PLATE F40.

STANDARD FREIGHT-CAR BRAKE CYLINDER AND AUXILIARY RESERVOIR COMBINED, WITH "F36" TRIPLE VALVE.

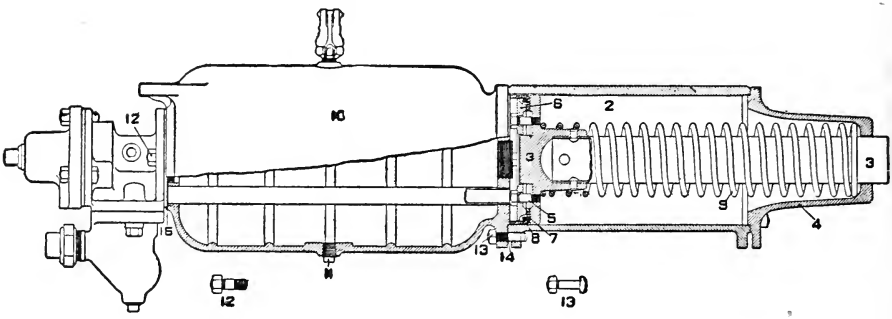

NOTE.—The "F40" Brake Apparatus illustrated above is furnished with "Schedule H-1" for freight cars, the light weight of which exceeds 15,000 pounds. The brake cylinder is 8 inches in diameter by 12 inches stroke. Together with the additional fixtures included in "Schedule H-1," it constitutes the Standard Automatic-Brake Equipment for Freight Cars.

No. 1. Standard Freight-Car Brake Cylinder and Auxiliary Reservoir Combined, with "F36" Triple Valve, complete.

No.
2. Cylinder Body.
3. Piston and Rod (includes Follower Studs and Nuts).
4. Non-Pressure Head.
5. Follower Stud and Nut.
6. Follower.
7. Packing Leather.
8. Packing Expander.
9. Release Spring.

No.
10. Reservoir (includes Nos. 11 and 12).
11. Drain Plug.
12. Reservoir Stud and Nut.
13. Cylinder-Head Bolt and Nut.
14. Cylinder Gasket.
15. Triple Valve Gasket.

PLATE F 41.

STANDARD FREIGHT-CAR BRAKE CYLINDER AND AUXILIARY RESERVOIR DETACHED, WITH "F 36" TRIPLE VALVE.

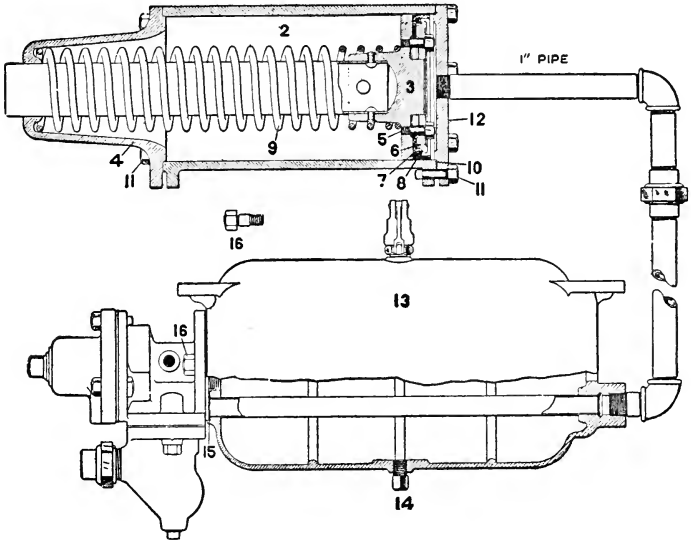

NOTE.—The "F 41." Brake Apparatus illustrated above is furnished with "Schedule H-2" for freight cars, the light weight of which exceeds 15,000 pounds, but the construction of which prevents the application of the combined-cylinder-and-reservoir type of brake illustrated on Plate "F 40." The brake cylinder is 8 inches in diameter by 12 inches stroke.

Standard Freight-Car Brake Cylinder and Auxiliary Reservoir Detached, with "F 36" Triple Valve, complete.

No.
1. Brake Cylinder, complete.
2. Cylinder Body.
3. Piston and Rod (includes Follower Studs and Nuts)
4. Non-Pressure Head.
5. Follower Stud and Nut.
6. Follower.
7. Packing Leather.
8. Packing Expander.

No.
9. Release Spring.
10. Cylinder Gasket.
11. Cylinder-Head Bolt and Nut.
12. Pressure Head.
13. Special Auxiliary Reservoir (includes Nos. 14 and 16)
14 Drain Plug.
15. Triple-Valve Gasket.
16. Reservoir Stud and Nut.

PLATE F 42.

SHORT-STROKE FREIGHT-CAR BRAKE CYLINDER AND AUXILIARY RESERVOIR COMBINED, WITH "F 36" TRIPLE VALVE.

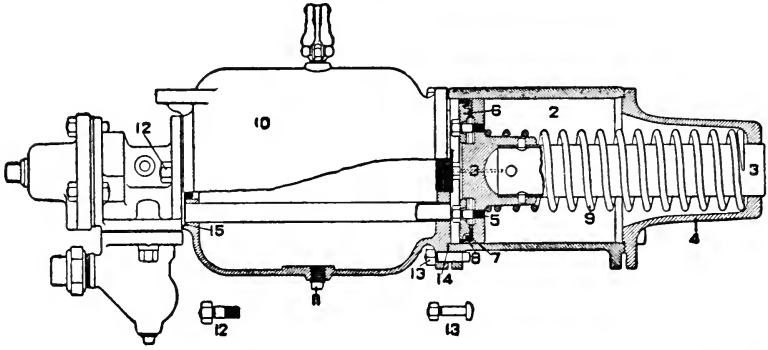

NOTE.—The "F 42" Brake Apparatus illustrated above is furnished with "Schedule H-3" for freight cars of medium weight to which a combined cylinder and reservoir of greater length cannot be successfully applied. The brake cylinder is 8 inches in diameter by 8 inches stroke.

No. 1. Short-Stroke Freight-Car Brake Cylinder and Auxiliary Reservoir Combined, with "F 36" Triple Valve, complete.

No.
2. Cylinder Body.
3. Piston and Rod (includes Follower Studs and Nuts).
4. Non-Pressure Head.
5. Follower Stud and Nut.
6. Follower.
7. Packing Leather.
8. Packing Expander.

No.
9. Release Spring.
10. Reservoir (includes Nos. 11 and 12).
11. Drain Plug.
12. Reservoir Stud and Nut.
13. Cylinder-Head Bolt and Nut.
14. Cylinder Gasket.
15. Triple-Valve Gasket.

PLATE G 43. DETAIL PARTS OF STANDARD FREIGHT-CAR BRAKE APPARATUS.

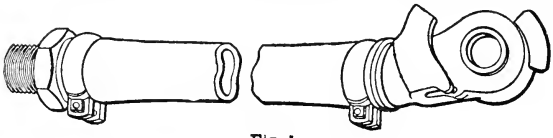

Fig. 1.

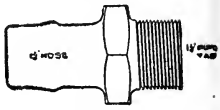

Fig 3.

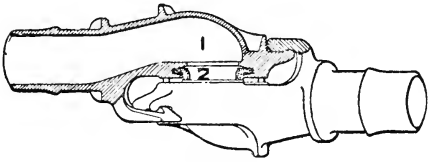

Fig. 2.

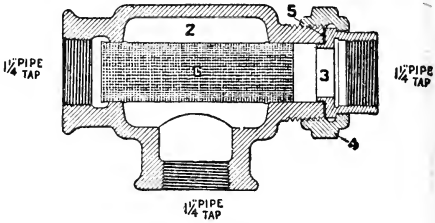

Fig. 4.

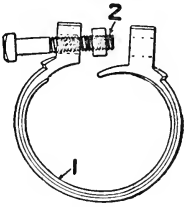

Fig. 5.

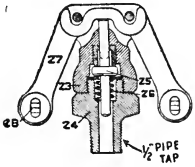

Fig. 8.

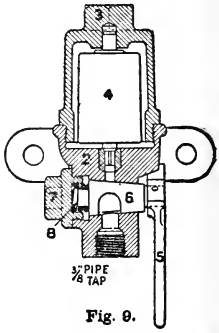

Fig. 9.

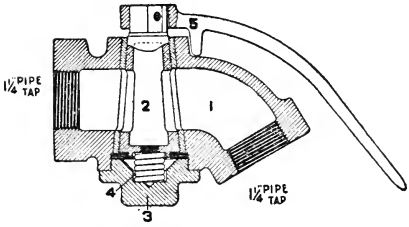

Fig. 6.

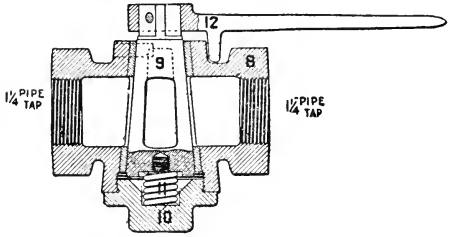

Fig. 7.

Fig. 10.

Fig. 11.

PLATE G 43.

DETAIL PARTS OF STANDARD FREIGHT-CAR BRAKE APPARATUS.

FIG. 1.

Standard One and One-quarter inch Hose and Coupling, complete.

Hose 22 inches long (order in pairs.)

FIG. 2.

Standard One and One-quarter inch Hose Coupling (order in pairs).

No.
1. One and One-quarter inch Hose Coupling Case.
2. One and One-quarter inch Hose-Coupling Packing Ring.

FIG. 3.

One and One-quarter inch Hose Nipple.

FIG. 4.

One and One-quarter inch Brake-Pipe Air Strainer, complete.

No.
2. Strainer Body.
3. Union Swivel.
4. Union Nut.
5. Union Gasket.
6. Strainer.

FIG. 5.

One and One-quarter inch Hose Clamp, complete.

No.
1. One and One-quarter inch Hose Clamp.
2. One and One-quarter inch Hose-Clamp Bolt.

FIG. 6.

One and One-quarter inch Angle Cock, complete.

No.
1. Angle-Cock Body.
2. Angle-Cock Key.
3. Angle-Cock Cap.
4. Angle-Cock Spring.
5. Angle-Cock Handle.

FIG. 7.

One and One-quarter inch Cut-out Cock, complete.

No.
8. Cock Body.
9. Cock Key.
10. Cock Cap.
11. Key Spring.
12. Cock Handle.

FIG. 8.

Release Valve, complete.

No.
23. Release-Valve Cylinder.
24. Release-Valve Stud.
25. Vent Valve.
26. Release-Valve Spring.
27. Release-Valve Handle.
28. Release-Valve Pin.

FIG. 9.

Improved Pressure-Retaining Valve, complete.

No.
2. Retaining-Valve Body (includes Nos. 5, 6, 7, and 8).
3. Retaining-Valve Case.
4. Retaining-Valve Weight.
5. Retaining-Valve Handle.
6. Retaining-Valve-Cock Key.
7. Retaining-Valve-Cock Cap.
8. Retaining-Valve-Cock Spring.

FIG. 10.

Coupling-Groove Cleaning Tool.

FIG. 11.

One and One-quarter inch Dummy Coupling.

PLATE P 45.

HIGH-SPEED BRAKE AUTOMATIC REDUCING VALVE

1898 PATTERN.

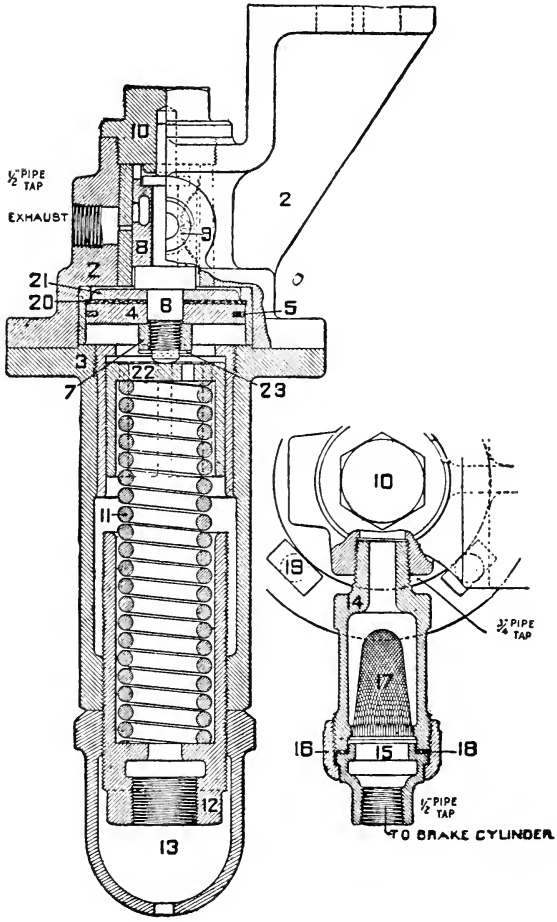

PLATE F 45.

HIGH-SPEED BRAKE AUTOMATIC REDUCING VALVE.

No. 1. High-Speed Brake Automatic Reducing Valve, complete.

No.		No.	
2.	Valve Body.	13.	Check Nut.
3.	Spring Box.	14.	Union Stud.
4.	Valve Piston (includes No. 5).	15.	Union Swivel.
5.	Packing Ring.	16.	Union Nut.
6.	Piston Stem.	17.	Union Strainer.
7.	Piston-Stem Nut.	18.	Union Gasket.
8.	Slide Valve.	19.	Bolt and Nut.
9.	Slide-Valve Spring.	20.	Leather Washer.
10.	Cap Nut.	21.	Piston Disc.
11.	Regulating Spring.	22.	Spring Abutment.
12.	Regulating Nut.	23.	Cotter Pin.

PLATE F46.

HIGH-SPEED PLAIN TRIPLE VALVE.

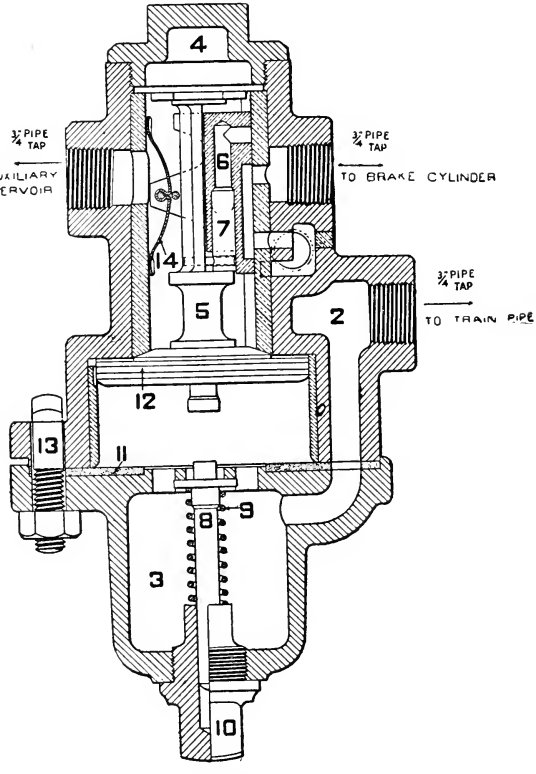

NOTE.—This Triple Valve is designed specially for use in combination with other High-Speed Brake Appliances, for operating both Driver and Engine-Truck Brakes, and must not be used for other purposes.

PLATE F46.

HIGH-SPEED PLAIN TRIPLE VALVE.

No. 1. High-Speed Plain Triple Valve, complete.

No.		No.	
2.	Triple-Valve Body (bushed)	9.	Graduating Spring.
3.	Cylinder Cap.	10.	Graduating-Stem Nut.
4.	Cap Nut.	11.	Cylinder Cap Gasket.
5.	Piston (includes No. 12).	12.	Packing Ring.
6.	Slide Valve.	13.	Bolt and Nut.
7.	Graduating Valve.	14.	Slide-Valve Spring.
8.	Graduating Stem.		

*GRADUATING SPRING SPECIFICATIONS: Phospor-Bronze Spring Wire, No. 14 B. W. G. [illegible] inches in diameter, 12 coils, 2 1/2 inches free height; [illegible] inches inside diameter.

PLATE F 47. DUPLEX PUMP GOVERNOR.

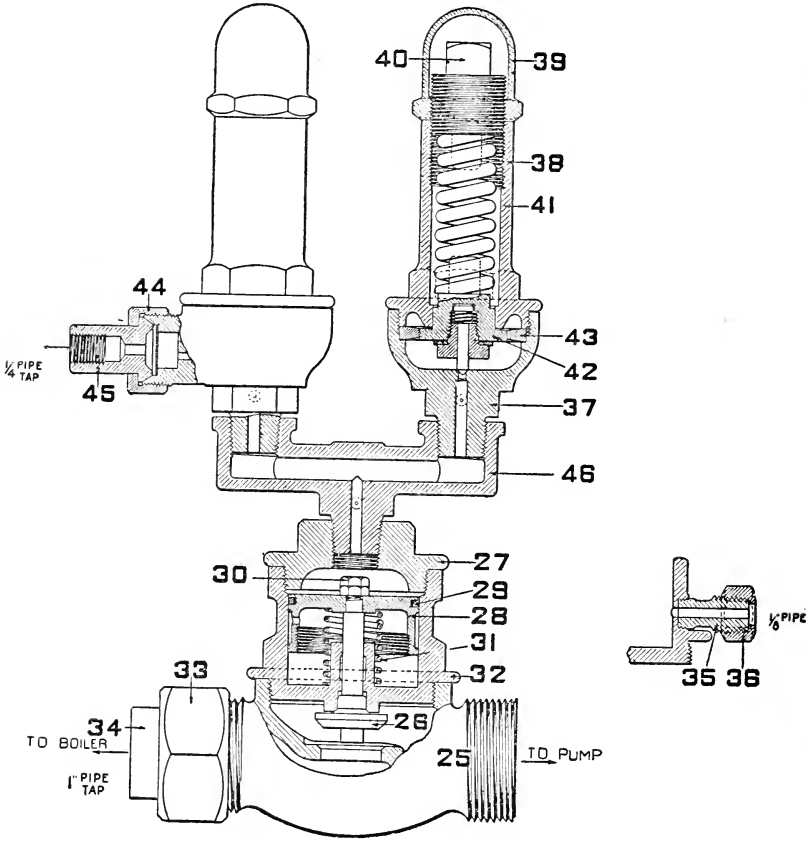

The diaphragm portion of this Governor at the right is adjusted to govern the 110-lb. pressure, and the one at the left the 90-lb. pressure for ordinary braking. A 1/4-inch Cut-out Cock must be used in the pipe attached to fitting 45 (see Plate "G 50") of the low-pressure diaphragm, and must be closed when operating the High-Speed Brake.

PLATE F47.

DUPLEX PUMP GOVERNOR.

No. 1. Duplex Pump Governor, complete.

No.
25. Steam-Valve Body.
26. Steam Valve.
27. Cylinder Cap.
28. Governor Piston (includes No. 29).
29. Piston Packing Ring.
30. Governor-Piston Nut.
31. Governor-Piston Spring.
32. Steam-Valve Cylinder (includes Nos. 35 and 36).
33. One-inch Union Nut.
34. One-inch Union Swivel.
35. Waste-Pipe Stud.

No.
36. Waste-Pipe Union Nut.
37. Diaphragm Body.
38. Spring Box.
39. Cap Nut.
40. Regulating Nut.
41. Regulating Spring.
42. Diaphragm, complete.
43. Diaphragm Ring.
44. Union Nut.
45. Union Swivel.
46. Siamese Fitting.

PLATE F48.

DETAIL PARTS OF HIGH-SPEED BRAKE AND HIGH-PRESSURE CONTROL APPARATUS.

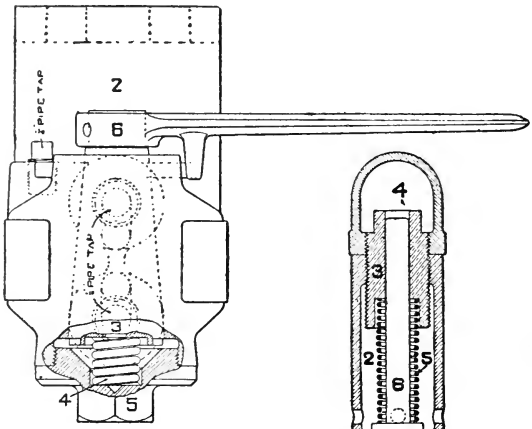

Fig. 1

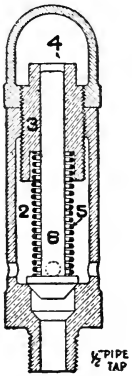

Fig. 2.

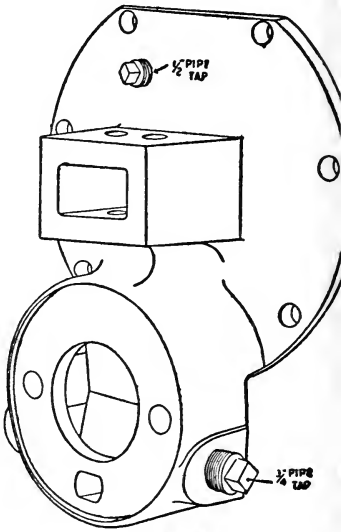

Fig. 4

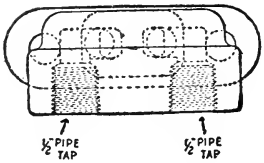

Fig. 3.

Fig. 6.

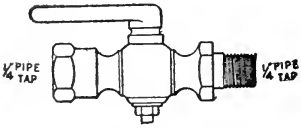

FIG. 5

PLATE F 48.

DETAIL PARTS OF HIGH-SPEED BRAKE AND HIGH PRESSURE CONTROL APPARATUS.

FIG. 1.

Feed-Valve Bracket with Reversing Cock, complete.

No.
2. Reversing-Cock Body.
3. Reversing-Cock Key.
4. Reversing-Cock Spring.
5. Reversing-Cock Cap.
6. Reversing-Cock Handle.

FIG. 2.

Safety Valve, complete.

No.
2. Safety-Valve Body.
3. Regulating Nut.
4. Cap Nut.
5. Regulating Spring.
6. Valve.

FIG. 3.

Feed-Valve Pipe Bracket.

FIG. 4.

Tender-Cylinder Head for Quick-Action Triple Valve with Slack-Adjuster Lug.

FIG. 5.

One-fourth inch Cock.

FIG. 6.

Flexible Hose Connection with Fittings for Half-inch Pipe.

PLATE G 49.

Diagramatic Illustration of Westinghouse High Pressure Control Apparatus.—*Opposite.*

)W HIGH PRESSURE

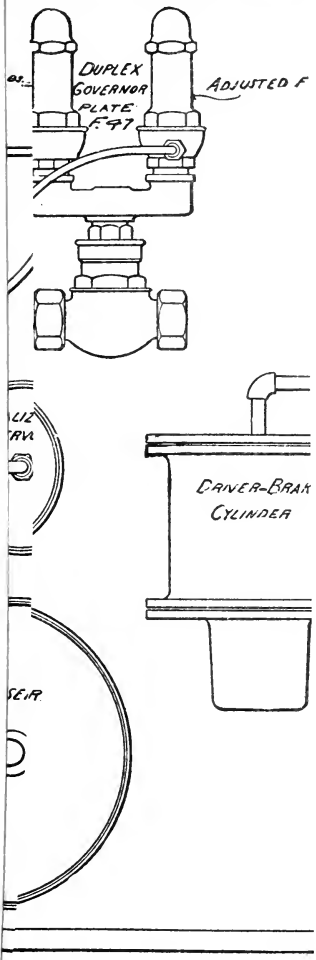

EXPLANATION.

'ALLATION OF THE APPARATUS FOR (
ARD BRAKE EQUIPMENT OF A LOCOM
HEDULE U," AND THE DEVICE IS TH

PLATE G 49. DIAGRAMATIC ILLUSTRATION OF WESTINGHOUSE HIGH PRESSURE CONTROL APPARATUS.

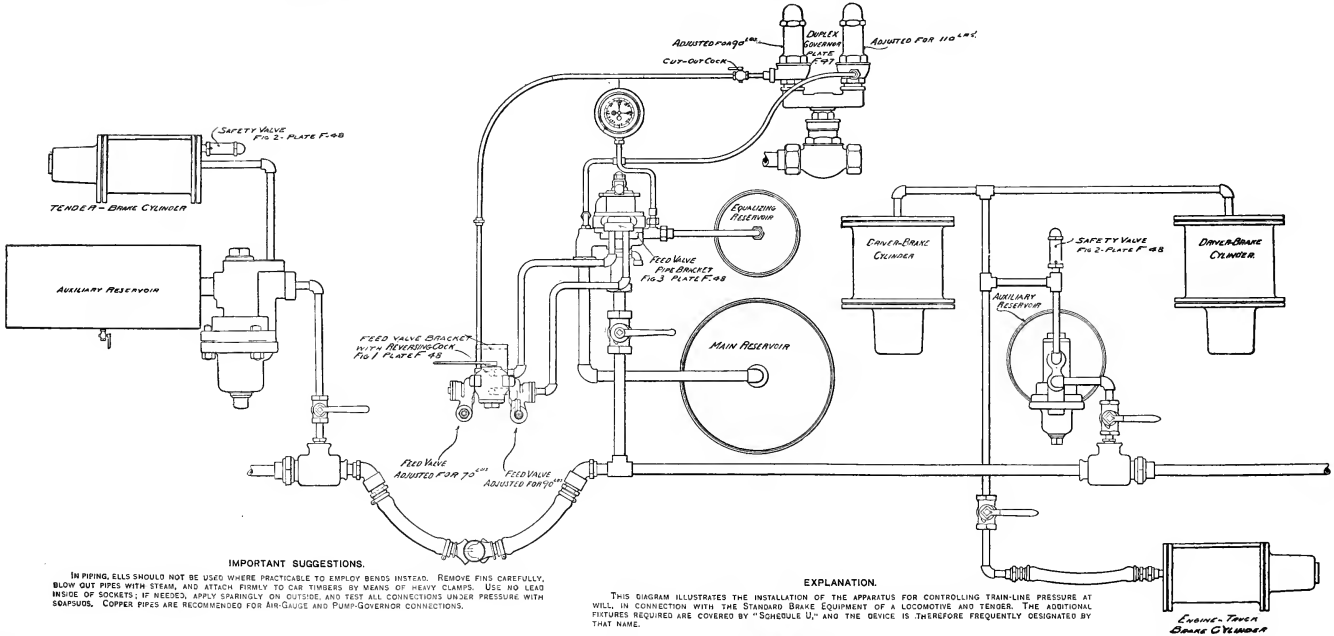

IMPORTANT SUGGESTIONS.

In piping, ells should not be used where practicable to employ bends instead. Remove fins carefully, blow out pipes with steam, and attach firmly to car timbers by means of heavy clamps. Use no lead inside of sockets; if needed, apply sparingly on outside, and test all connections under pressure with soapsuds. Copper pipes are recommended for Air-Gauge and Pump-Governor connections.

EXPLANATION.

This diagram illustrates the installation of the apparatus for controlling train-line pressure at will, in connection with the Standard Brake Equipment of a locomotive and tender. The additional fixtures required are covered by "Schedule U," and the device is therefore frequently designated by that name.

PLATE G 50.

Diagramatic Illustration of the Westinghouse Standard High Speed Brake.—*Opposite.*

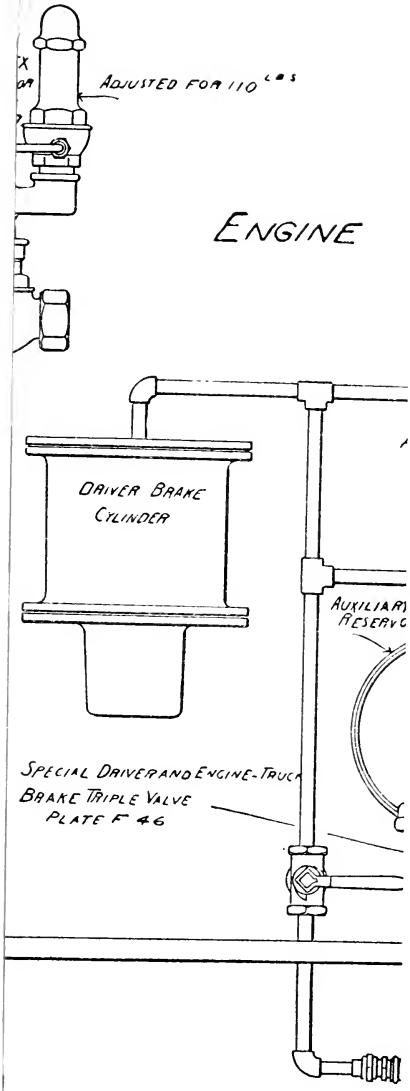
ADJUSTED FOR 110 LBS
ENGINE
DRIVER BRAKE CYLINDER
AUXILIARY RESERVOIR
SPECIAL DRIVER AND ENGINE-TRUCK BRAKE TRIPLE VALVE PLATE F 46

PLATE G50. DIAGRAMATIC ILLUSTRATION OF THE WESTINGHOUSE STANDARD HIGH SPEED BRAKE.

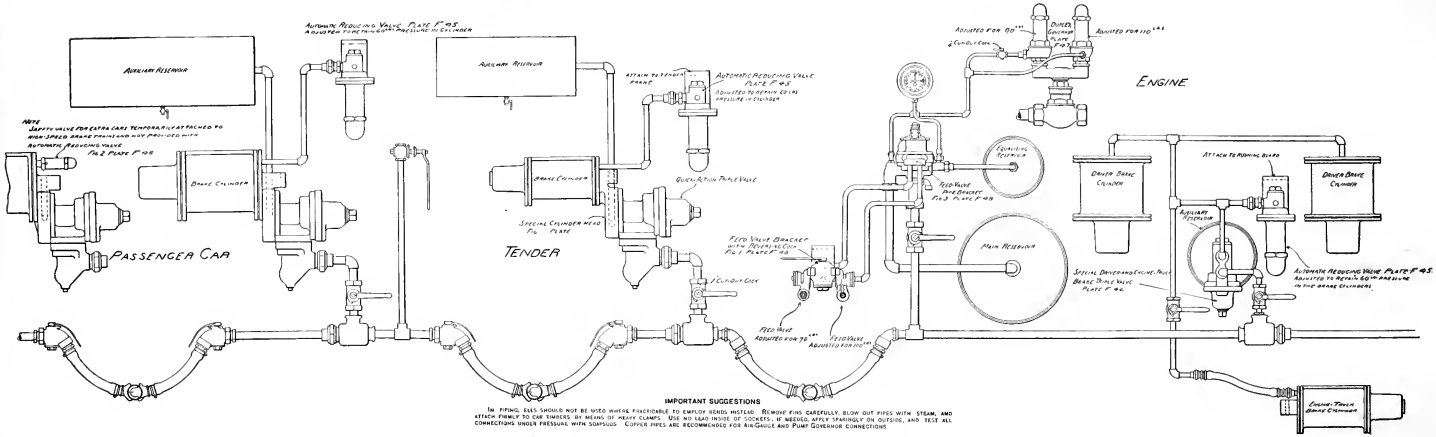

IMPORTANT SUGGESTIONS

In piping, ells should not be used where practicable to employ bends instead. Remove fins carefully, blow out pipes with steam, and attach firmly to car timbers by means of heavy clamps. Use no lead inside of joints, if needed, apply sparingly on outside, and test all connections under pressure with soapsuds. Copper pipes are recommended for Air-Gauge and Pump Governor connections.

THE LIBRARY
UNIVERSITY OF CALIFORNIA
Santa Barbara

THIS BOOK IS DUE ON THE LAST DATE
STAMPED BELOW.

Series 9482

UC SOUTHERN REGIONAL LIBRARY FACILITY
A 000 622 596 5